1" LED Wall Bracket



Linear Narrow Profile
LED Indirect Wall Bracket
with Flush Lens and Internal Driver

BUN1 LED

Job Name

Fixture Type

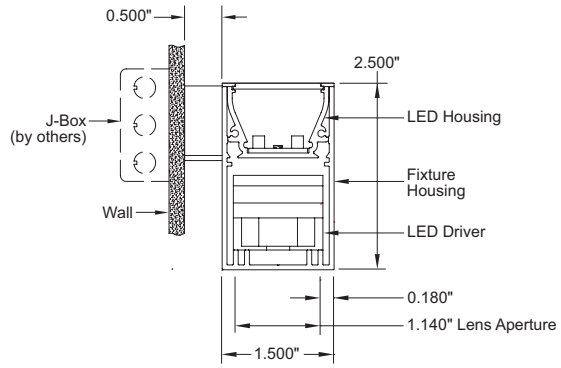

Fixture Profile

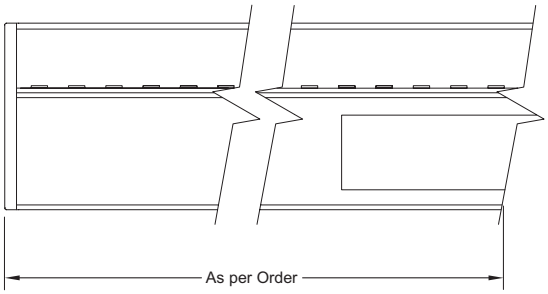

Sectional Side View

BUN1-L ____ ____ ____ ____ - ____ - ____ - ____

CRI	Color	Output	Dimming	Lens	Fix. Length (")	Fix. Finish
8 80+ **9** 90+ **R** RGB & RGBW	**27** 2700K *(90 CRI only)* **30** 3000K **35** 3500K **40** 4000K **TW** Tunable White (1)(2) **DW** Dim-to-Warm (1)(2) **GB** RGB **G3** RGBW 3000K **G5** RGBW 3500K	**S** Standard **H** High **M** Maximum *Custom:* *Specify Lm/Ft* (3) **F** Fixed *(RGBs)*	**S** Std. 0-10V 1% **O** Dim-to-Off (1)(2) **L** Lutron 1% (3) **D** DALI 1% **P** PoE (3) **2** Wire *(phase-cut)* **T** Step *(10%-70%)* **W** Wireless (3) **X** DMX *(RGBs)*	**DF** Diffusion **AS** Asymmetric **BW** Batwing **LS** Louver Specular	*Nominal:* **24 36 48** **60 72 84** **96** *(see Page 2)* *Custom:* **Cxxx** *(in inches)* (3)	**W** White, Std. **B** Black *Custom Color: Specify RAL#*

Product Code Example: **BUN1-L830S-DF-C120-W**

An ultra-clean line, low profile, narrow aperture indirect linear wall bracket utilizing high performance LED boards and lenses. Extruded aluminum housing with internal drivers (RBG/W drivers are external).

Features

- Starfire's proprietary EvenGlow™ system provides uniform lens illumination from edge-to-edge without lamp imaging, bright spots or shadows at any length.
- Fixtures fabricated to any specified length without custom engineering.
- Exceptional lumen per watt efficiency.
- High efficiency, low cost, dynamic Tunable White or Dim-to-Off options.
- High performance snap-in lenses; flush diffusion, batwing or asymmetric plus white or specular louver options.
- Combine with welded corner Connectors to form small or large scaled patterns of uniform light.
- ADA compliant

Fixture Specifications

- Housing: Heavy-duty extruded aluminum.
- Finish: White (std), custom available.
- Weight: Approx. 0.9 lb per linear foot.
- UL Listed, (indoor non-condensing).

Electrical

- Power consumption: Per specification based on LED configuration.
- Input Voltage: 120-277V universal driver.
- Ambient operating range: -4 °F to +100 °F.
- Internal power and dimming bus between sections for continuous fixtures (RGB/W sections provide Class 2 plenum wiring between fixture and remote driver.
- RGB & RGBW utilize external Decoder and Power Supply capable of driving multiple fixture segments.
- 1% Dimming: 0-10V standard (included), consult factory for other options.

Mounting

- Easy two piece side mount bracket. Consult factory for special conditions.

Options (Consult factory)

- Occupancy sensor, daylight control module.
- EM battery pack in 4ft segments. Delivers 1000 + total lumens for 90 mins (depending upon configuration). Specify location (Not for use with RGBs).
- BAA/BABA compliance for some configurations - factory to confirm.

LED Specifications/Photomerty: Page 2

(1) 90 CRI, 2700K-6500K std., others available. Specify CCT range.
(2) 0-10V Control, std., others available – Specify (Factory to confirm).
(3) Specify – Factory to confirm

STARFIRE LIGHTING, INC.
7 Donna Drive, Wood-Ridge, NJ 07075
starfirelighting.com

P 201.438.9540
F 201.438.9541

All designs and drawings are the property of STARFIRE LIGHTING, INC. We reserve the right to make changes to specifications and approved designs at any time without notice to facilitate manufacturing methods to the extent that such changes do not compromise design integrity. All performance specifications are subject to +/- 10% deviation.

BUN1 LED

White LED Specification

- Choice of lumen output levels: Standard, High, Max. and Custom (between 200 and 1100 Lm/Ft) depending upon configuration. **High Output option***: Up to 1800 Lm/Ft, consult factory.
- LED efficiency: Up to 160 Lm/Wt at Maximum output and 180 Lm/Wt at Standard power (at 80+ CRI).
- Proprietary in-house, ultra-tight Vf binned LEDs for uniform intensity.
- Color consistency**: Equal or better than 3 SCDM.
- Tunable Range: 2700K-6500K, other ranges available.
- Dim-to-Warm – Warm range down to 1800K.
- L70: 50,000+ hours at Maximum output.
- 5 year limited warranty***

Diffusion Lens (Std.) – White LEDs

80 CRI		4000K		3500K		3000K		2700K (90 CRI)	
Output Setting	Lm/Ft	Wt/Ft	Lm/Wt	Wt/Ft	Lm/Wt	Wt/Ft	Lm/Wt	Wt/Ft	Lm/Wt
S Standard	**250**	1.7	147.4	1.7	143.3	1.8	139.3	1.9	129.9
H High	**500**	3.5	144.0	3.6	139.9	3.7	135.9	4.0	125.9
M Maximum	**750**	5.3	140.6	5.5	136.5	5.7	132.5	6.2	121.8

LV6

Clear – White LEDs

80 CRI		4000K		3500K		3000K		2700K (90 CRI)	
Output Setting	Lm/Ft	Wt/Ft	Lm/Wt	Wt/Ft	Lm/Wt	Wt/Ft	Lm/Wt	Wt/Ft	Lm/Wt
S Standard	**250**	1.6	155.4	1.7	151.2	1.7	146.9	1.8	137.1
H High	**500**	3.3	152.0	3.4	147.8	3.5	143.5	3.8	133.0
M Maximum	**750**	5.0	148.6	5.2	144.4	5.4	140.1	5.8	129.0

LV6

Batwing – White LEDs

80 CRI		4000K		3500K		3000K		2700K (90 CRI)	
Output Setting	Lm/Ft	Wt/Ft	Lm/Wt	Wt/Ft	Lm/Wt	Wt/Ft	Lm/Wt	Wt/Ft	Lm/Wt
S Standard	**250**	1.7	143.6	1.8	139.7	1.8	135.7	2.0	126.6
H High	**500**	3.6	140.2	3.7	136.3	3.8	132.3	4.1	122.5
M Maximum	**750**	5.5	136.8	5.6	132.9	5.8	128.9	6.3	118.4

LV6

Asymmetric – White LEDs

80 CRI		4000K		3500K		3000K		2700K (90 CRI)	
Output Setting	Lm/Ft	Wt/Ft	Lm/Wt	Wt/Ft	Lm/Wt	Wt/Ft	Lm/Wt	Wt/Ft	Lm/Wt
S Standard	**250**	1.7	147.5	1.7	143.5	1.8	139.5	1.9	130.1
H High	**500**	3.5	144.1	3.6	140.1	3.7	136.1	4.0	126.0
M Maximum	**750**	5.3	140.7	5.5	136.7	5.7	132.6	6.2	121.9

LV6

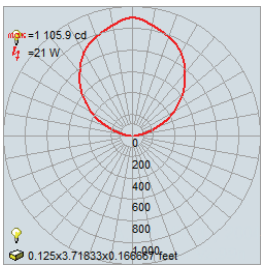

Diffusion (Std.)

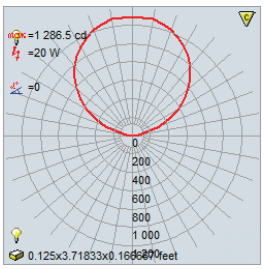

Clear

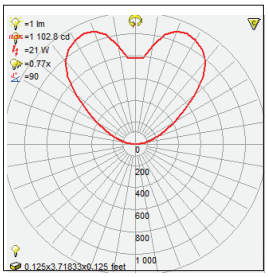

Batwing

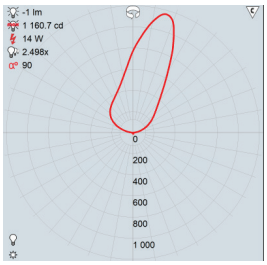

Asymmetric

RGB & RGBW LEDs

Maximum Output (Diffuser)

	Lm/Ft	Wt/Ft	Lm/Wt
RGB (all on)	123	9.4	6.0
White	467	6.8	8.4
RGBW (all on)	617	16.2	38.0

Output adjustable with DMX-512 Control.

Performance for standard RGBW combo tape with level diffusion lens. Consult the factory for other options.

Fixture Overall Length*

Nominal	Actual
24"	24.34"
36"	33.62"
48"	48.06"
60"	55.67"
72"	71.81"
84"	83.22"
96"	95.34"

Fixture Length Ordering Example:

For a nominal 36" length (33.62" exact): enter **36.**

To order an exact 36" length: enter **C36.**

Contact factory for fixture installation dimensions

* Some exact lengths may include unobtrusive lens filler

* Consult factory for High Output White channel 1200+ Lm/Ft

** Does not apply to Tunable White

*** See Starfire website for Product Limited Warranty

STARFIRE LIGHTING, INC.
7 Donna Drive, Wood-Ridge, NJ 07075
starfirelighting.com

P 201.438.9540
F 201.438.9541

All designs and drawings are the property of STARFIRE LIGHTING, INC. We reserve the right to make changes to specifications and approved designs at any time without notice to facilitate manufacturing methods to the extent that such changes do not compromise design integrity. All performance specifications are subject to +/- 10% deviation.