1" VersLux LED Wall Bracket

LED



Linear Narrow Profile
LED Direct/Indirect Wall Bracket
Fixture – Flush Lens, External Driver

BHX1

Job Name

Fixture Type

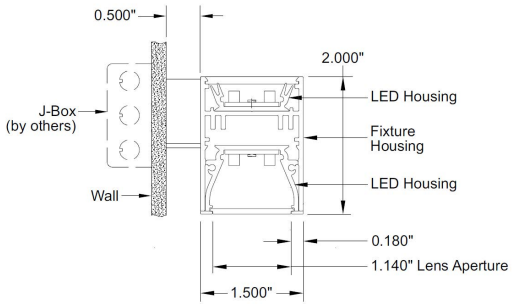

Fixture Profile

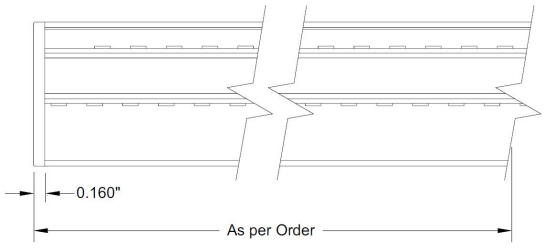

Sectional Side View

Remote Driver Enclosure

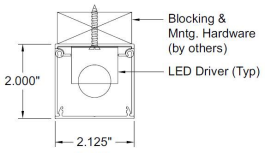

Profile

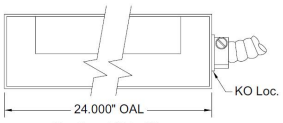

Sectional Side View

BHX1-L [ ] [ ] [ ] [ ] [ ] - [ ] [ ] [ ] [ ] [ ]

DIRECT					INDIRECT				
CRI	**Color Temperature**	**Output**	**Dimming**	**Lens**	**CRI**	**Color Temperature**	**Output**	**Dimming**	**Lens**
8 80+ **9** 90+ **R** RGB & RGBW	**27** 2700K *(90CRI only)* **30** 3000K **35** 3500K **40** 4000K **TW** Tunable White [1][2] **DW** Dim-to-Warm [1][2] **GB** RGB **G3** RGBW 3000K **G5** RGBW 3500K	**S** Standard **H** High **M** Maximum *Custom:* *Specify Lm/Ft* [3] **F** Fixed *(RGBs)*	**S** Std. 0-10V 1% **O** Dim-to-Off [1][2] **L** Lutron 1% [3] **D** DALI 1% **P** PoE [3] **2** Wire *(phase-cut)* **T** Step *(10%-70%)* **W** Wireless [3] **X** DMX *(RGBs)*	**DF** Diffusion **AS** Asymmetric **BW** Batwing **LS** Louver Specular	**8** 80+ **9** 90+ **R** RGB & RGBW	**27** 2700K *(90CRI only)* **30** 3000K **35** 3500K **40** 4000K **TW** Tunable White [1][2] **DW** Dim-to-Warm [1][2] **GB** RGB **G3** RGBW 3000K **G5** RGBW 3500K	**S** Standard **H** High **M** Maximum *Custom:* *Specify Lm/Ft* [3] **F** Fixed *(RGBs)*	**S** Std. 0-10V 1% **O** Dim-to-Off [1][2] **L** Lutron 1% [3] **D** DALI 1% **P** PoE [3] **2** Wire *(phase-cut)* **T** Step *(10%-70%)* **W** Wireless [3] **X** DMX *(RGBs)*	**CL** Clear (std) **AS** Asymmetric **BW** Batwing

FIXTURE

- [ ] [ ]

Length (inches)	**Fix Finish**
Nominal: **24**[4] **36** **48** **60** **72** **84** **96** *(see Table)* *Custom:* **Cxxx** *(in inches)*	**W** White **B** Black *Custom Color:* *Specify RAL#*

Product Code Example: **BHX1-L830SSDF-830SSCL-C80-W**

A direct/Indirect, ultra-clean line, low profile, narrow aperture, linear wall bracket fixture. The BHX1 utilizes high performance LED boards and flush lenses. Extruded aluminum housings with external driver.

Features

- Starfire's proprietary EvenGlow™ system provides uniform illumination from end-to-end without lamp imaging, bright spots or shadows.
- Fixtures fabricated to any specified length without custom engineering.
- High performance flush lens in clear, diffusion, batwing or asymmetric distribution.
- Exceptional lumen per watt efficiency.
- High efficiency, low cost, dynamic Tunable White and Dim-to-Warm options.
- RGB & RGBW full color tuning options.
- Independent power and dimming of direct and indirect circuits.
- Joined sections can be powered with single feed reducing installation costs.
- Welded corners are available to create a continuous fixture.

[1] 90 CRI, 2700K-6500K std., others available. Specify CCT range.
[2] 0-10V Control, std., others available – Specify (Factory to confirm).
[3] Specify – Factory to confirm.
[4] Available in output levels of 450 lm/ft or greater only.

STARFIRE LIGHTING, INC.
7 Donna Drive, Wood-Ridge, NJ
07075 starfirelighting.com

P 201.438.9540
F 201.438.9541

All designs and drawings are the property of STARFIRE LIGHTING, INC. We reserve the right to make changes to specifications and approved designs at any time without notice to facilitate manufacturing methods to the extent that such changes do not compromise design integrity. All performance specifications are subject to +/- 10% deviation.

VersaLux LED Direct/Indirect Wall Bracket – Flush Lens with External Driver

BHX1

Fixture Specifications

- Housing/Trim: Heavy-duty extruded aluminum.
- Finish: White (std), custom available.
- Weight: Approx. 1.0 lb per linear foot.
- UL Listed, (indoor non-condensing).

Mounting

- Easy two-piece side mount bracket.
- Consule factory for special conditions.

Electrical

- Power consumption: Per specification based on LED configuration.
- Input Voltage: 120-277V universal driver.
- Ambient operating range: -4 °F to +100 °F.
- Remote electronic driver.
- Integral wiring bus between fixture sections.
- Drivers with full dimming range at any output choice.
- Dimming: 0-10V 1% standard, contact factory for options.
- RGB and RGBW Dimming: DMX only.
- RGB and RGBW utilize external Decoder and Power Supply, capable of driving multiple fixture segments.

White LED Strip

High output, edge-to-edge and end-to-end illumination

- Choice of lumen output levels: **S**: Standard, **H**: High, **M**: Max. **C**: Custom (between 200 and 1100 Lm/Ft) depending upon configuration.
- **High Output option***: Up to 1800 Lm/Ft, consult factory.
- LED efficiency: Up to 160 Lm/Wt at Maximum output and 180 Lm/Wt. at Standard Power (at 80+ CRI).
- Proprietary in-house, ultra-tight Vf binned LEDs for uniform intensity.
- Color consistency**: Equal or better than 3 SCDM.
- Tunable Range: 2700K-6500K, other ranges available.
- Dim-to-Warm – Warm range down to 1800K.
- L70: 50,000+ hours at Maximum output.
- 5 year limited warranty***

Options (Consult factory)

- Occupancy sensor, daylight control module.
- EM battery pack in 4ft segments. Delivers 1000+ total lumens for 90 mins (depending upon configuration). Specify location. (Not for use with RGBs)
- BAA/BABA compliance for some configurations – factory will advise.

White LED Specifications / Photometry: Page 3
(Consult factory for RGB)

RGB & RGBW LEDs

Maximum Output (Diffuser)

	Lm/Ft	Wt/Ft	Lm/Wt
RGB (all on)	123	9.4	6.0
White	467	6.8	8.4
RGBW (all on)	617	16.2	38.0

Output adjustable with DMX-512 Control

Fixture Dimensions

Nominal	Actual
24"	24.34"
36"	33.62"
48"	48.06"
60"	55.67"
72"	71.81"
84"	83.22"
96"	95.34"

Fixture Length Example:
For a nominal 36" length (33.62" exact): enter **36.**
To order an exact 36" length: enter **C36.**

Consult factory for fixture installation dimensions

* Consult factory for High Output White channel 1200+ Lm/Ft
** Does not apply to Tunable White
*** See Starfire website for Product Limited Warranty

STARFIRE LIGHTING, INC.
7 Donna Drive, Wood-Ridge, NJ 07075
starfirelighting.com
P 201.438.9540
F 201.438.9541

All designs and drawings are the property of STARFIRE LIGHTING, INC. We reserve the right to make changes to specifications and approved designs at any time without notice to facilitate manufacturing methods to the extent that such changes do not compromise design integrity. All performance specifications are subject to +/- 10% deviation.

BHX1

Direct – White LEDs

Diffusion

80 CRI		4000K		3500K		3000K		2700K (90 CRI)	
Output Setting	Lm/Ft	Wt/Ft	Lm/Wt	Wt/Ft	Lm/Wt	Wt/Ft	Lm/Wt	Wt/Ft	Lm/Wt
S Standard	**250**	1.7	147.4	1.7	143.3	1.8	139.3	1.9	129.9
H High	**500**	3.5	144.0	3.6	139.9	3.7	135.9	4.0	125.9
M Maximum	**750**	5.3	140.6	5.5	136.5	5.7	132.5	6.2	121.8

LV6

Direct: Diffusion
Indirect: Clear

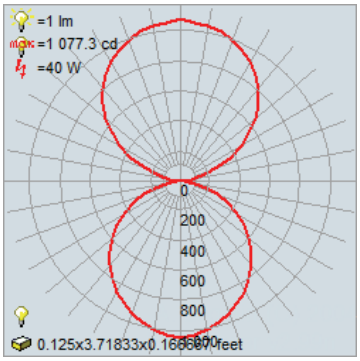

Batwing

80 CRI		4000K		3500K		3000K		2700K (90 CRI)	
Output Setting	Lm/Ft	Wt/Ft	Lm/Wt	Wt/Ft	Lm/Wt	Wt/Ft	Lm/Wt	Wt/Ft	Lm/Wt
S Standard	**250**	1.7	143.6	1.8	139.7	1.8	135.7	2.0	126.6
H High	**500**	3.6	140.2	3.7	136.3	3.8	132.3	4.1	122.5
M Maximum	**750**	5.5	136.8	5.6	132.9	5.8	128.9	6.3	118.4

LV6

Asymmetric

80 CRI		4000K		3500K		3000K		2700K (90 CRI)	
Output Setting	Lm/Ft	Wt/Ft	Lm/Wt	Wt/Ft	Lm/Wt	Wt/Ft	Lm/Wt	Wt/Ft	Lm/Wt
S Standard	**250**	1.7	147.5	1.7	143.5	1.8	139.5	1.9	130.1
H High	**500**	3.5	144.1	3.6	140.1	3.7	136.1	4.0	126.0
M Maximum	**750**	5.3	140.7	5.5	136.7	5.7	132.6	6.2	121.9

LV6

Indirect – White LEDs

Clear (std.)

80 CRI		4000K		3500K		3000K		2700K (90 CRI)	
Output	Lm/Ft	Wt/Ft	Lm/Wt	Wt/Ft	Lm/Wt	Wt/Ft	Lm/Wt	Wt/Ft	Lm/Wt
Standard	**250**	1.6	158.5	1.6	154.1	1.7	149.8	1.8	139.8
High	**500**	3.2	155.1	3.3	150.7	3.4	146.4	3.7	135.7
Maximum	**750**	4.9	151.7	5.1	147.3	5.2	143.0	5.7	131.7

LV6

Direct: Diffusion
Indirect: Batwing

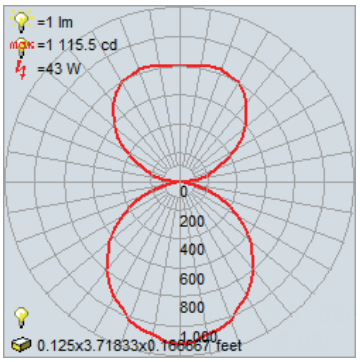

Batwing

80 CRI		4000K		3500K		3000K		2700K (90 CRI)	
Output	Lm/Ft	Wt/Ft	Lm/Wt	Wt/Ft	Lm/Wt	Wt/Ft	Lm/Wt	Wt/Ft	Lm/Wt
Standard	**250**	1.8	138.0	1.9	134.3	1.9	130.5	2.1	121.7
High	**500**	3.7	134.6	3.8	130.9	3.9	127.1	4.3	117.6
Maximum	**750**	5.7	131.2	5.9	127.4	6.1	123.7	6.6	113.5

LV6

All designs and drawings are the property of STARFIRE LIGHTING, INC. We reserve the right to make changes to specifications and approved designs at any time without notice to facilitate manufacturing methods to the extent that such changes do not compromise design integrity. All performance specifications are subject to +/- 10% deviation.