4" LED Wet Location Low Profile Surface Mount

LED



Linear LED Low Profile Direct Surface Mount with Flush Lens and Internal Driver for Wet Locations

SDW4

Job Name

Fixture Type

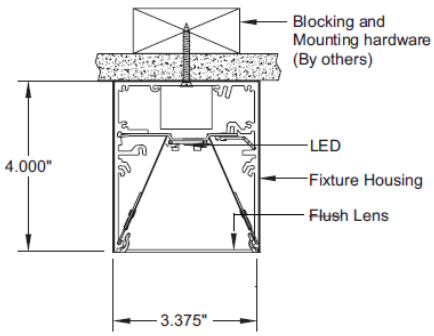

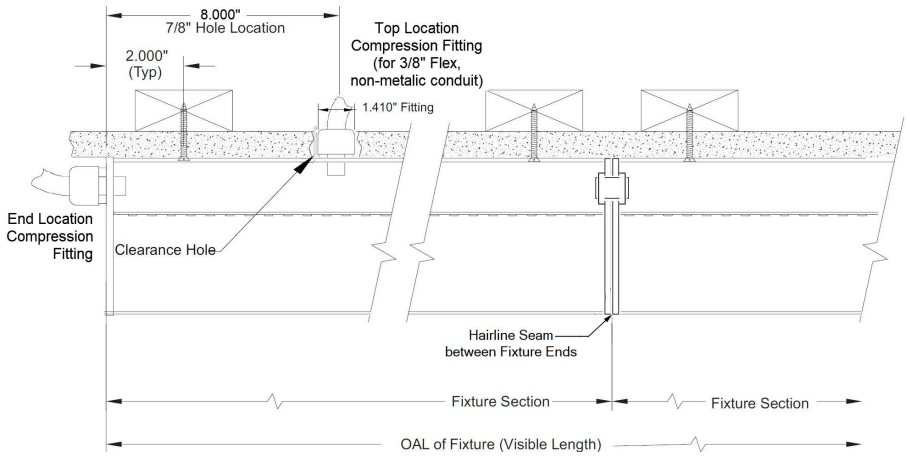

SDW4- [ ] [ ] [ ] [ ] - [ ] - [ ] - [ ] [ ]

CRI	Color	Output	Dimming	Lens	Length (")	Cbl. Feed	Finish
8 80+ **9** 90+ **R** RGB & RGBW	**27** 2700K *(90CRI only)* **30** 3000K **35** 3500K **40** 4000K **TW** Tunable White [1] [2] **DW** Dim-to-Warm [1] [2] **GB** RGB **G3** RGBW 3000K **G5** RGBW 3500K	**S** Standard **H** High **M** Maximum *Custom:* *Specify Lm/Ft* [3] **F** Fixed *(RGBs)*	**S** Std. 0-10V 1% **O** Dim-to-Off [1][2] **L** Lutron 1% [3] **D** DALI 1% **P** PoE [3] **2** Wire *(phase-cut)* **T** Step *(10%-70%)* **W** Wireless [3] **X** DMX *(RGBs)*	**DF** Diffuser **AS** Asymmetric **BW** Batwing	*Nominal:* **24** **36** **48** **60** **72** **84** **96** *(see Page 2)* *Custom:* **Cxxx** *(in inches)* [3]	**T** Top, Std. **E** End	**W** White, Std. **B** Black *Custom Color: Specify RAL#*

Product Code Example: **SDW4-830HS-DF-C120-TW**

A wet location, ultra-clean line, low profile, linear surface mount fixture utilizing high performance LED boards and lenses. Extruded aluminum housing with internal driver. Special sealants and gaskets allow for use in wet locations, (horizontal mount lens facing down only).

Features

- Starfire's proprietary EvenGlow™ system provides uniform illumination from end-to-end without lamp imaging, bright spots or shadows at any length.
- Fixtures fabricated to any specified length without custom engineering, maximum 96" per section.
- Multiple sections can be joined having a single power feed. Lenses are not continuous.
- Exceptional lumen per watt efficiency.
- High efficiency, low cost Tunable White, Dim-to-Warm and Dim-to-Off options.
- High performance snap-in lenses; flush diffusion, flush batwing or asymmetric.

Fixture Specifications

- Housing/Trim: Heavy-duty extruded aluminum.
- Finish: White (std), custom available.
- Weight: Approx. 3.5 lbs. per linear foot.
- UL Listed, Wet Location.
- IP65 design rating.

Electrical

- Power consumption: Per specification based on LED configuration.
- Input Voltage: 120-277V universal driver.
- Ambient operating range: -4 °F to +100 °F.
- Integral wiring bus between fixture sections.
- Integral electronic drivers.
- RGB & RGBW Power Supply and DMX Decoder are external.
- Dimming: 0-10V 1% standard, contact factory for options.

Mounting

- Screw mount housing to blocking (by others).
- Contact factory for special ceiling conditions.

Options (Consult factory)

- Occupancy sensor, daylight control module[4]
- EM battery pack in 4ft segments. Delivers 1000+ total lumens for 90 mins (depending upon configuration). Specify location. Status indicator/Test button in remote water tight box with clear cover.
- BAA/BABA compliance for some configurations – factory will advise.

LED Specifications/Photometry: Page 2

[1] 90 CRI, 2700K-6500K std., others available. Specify CCT range
[2] 0-10V Control, std., others available – Specify (Factory to confirm)
[3] Specify - Factory to confirm
[4] Sensor must be wet location rated

STARFIRE LIGHTING, INC.
7 Donna Drive, Wood-Ridge, NJ 07075
starfirelighting.com

P 201.438.9540
F 201.438.9541

All designs and drawings are the property of STARFIRE LIGHTING, INC. We reserve the right to make changes to specifications and approved designs at any time without notice to facilitate manufacturing methods to the extent that such changes do not compromise design integrity. All performance specifications are subject to +/- 10% deviation.

SDW4

White LEDs

- Choice of lumen output levels:
  S: Standard, **H:** High, **M:** Maximum,
  C: Custom (between 200 and 1100 Lm/Ft) depending upon configuration.
  High output*: Up to 1800 Lm/Ft, consult factory.
- LED Efficiency: Up to 160 Lm/Wt at Max. output and 180 Lm/Wt at Standard power (at 80+ CRI).
- Proprietary in-house, ultra-tight Vf binned LEDs for uniform intensity.
- Color Consistency**: Equal or better than 3 SCDM.
- Tunable Range: 2700K-6500K other ranges available.
- Dim-To-Warm option – warm range down to 1800K.
- L70: 50,000+ hours at Max. output.
- 5 year limited warranty***

Fixture Dimensions

Fixture Overall Length

Nominal	Actual
24"	23.5"
36"	34.5"
48"	45.5"
60"	56.5"
72"	72"
84"	84"
96"	95"

Fixture Length Ordering Example:
For a nominal 36" length (34.5" exact): enter **36**.
To order an exact 36" length: enter **C36**.
Consult factory for fixture installation dimensions.

RGB & RGBW LEDs

Maximum Output (Diffuser)

	Lm/Ft	Wt/Ft	Lm/Wt
RGB (all on)	123	9.4	6.0
White	467	6.8	8.4
RGBW (all on)	617	16.2	38.0

Output adjustable with DMX-512 Control

Diffuser – White LEDs

80 CRI		4000K		3500K		3000K		2700K (90 CRI)	
Output Setting	**Lm/Ft**	**Wt/Ft**	**Lm/Wt**	**Wt/Ft**	**Lm/Wt**	**Wt/Ft**	**Lm/Wt**	**Wt/Ft**	**Lm/Wt**
S Standard	**500**	3.7	133.6	3.9	129.8	4.0	126.0	4.3	116.6
H High	**750**	5.8	130.2	5.9	126.4	6.1	122.6	6.7	112.5
M Maximum	**1000**	7.9	126.8	8.1	123.0	8.4	119.2	9.2	108.5

LV6

Batwing – White LEDs

80 CRI		4000K		3500K		3000K		2700K (90 CRI)	
Output Setting	**Lm/Ft**	**Wt/Ft**	**Lm/Wt**	**Wt/Ft**	**Lm/Wt**	**Wt/Ft**	**Lm/Wt**	**Wt/Ft**	**Lm/Wt**
S Standard	**500**	4.1	123.2	4.2	119.7	4.3	116.2	4.7	107.4
H High	**750**	6.3	119.8	6.5	116.3	6.6	112.8	7.3	103.3
M Maximum	**1000**	8.6	116.4	8.9	112.9	9.1	109.4	10.1	99.2

LV6

Asymmetric – White LEDs

80 CRI		4000K		3500K		3000K		2700K (90 CRI)	
Output Setting	**Lm/Ft**	**Wt/Ft**	**Lm/Wt**	**Wt/Ft**	**Lm/Wt**	**Wt/Ft**	**Lm/Wt**	**Wt/Ft**	**Lm/Wt**
S Standard	**500**	3.8	132.5	3.9	128.8	4.0	125.0	4.3	115.7
H High	**750**	5.8	129.1	6.0	125.4	6.2	121.6	6.7	111.6
M Maximum	**1000**	8.0	125.7	8.2	121.9	8.5	118.2	9.3	107.5

LV6

Photometrics

Diffuser

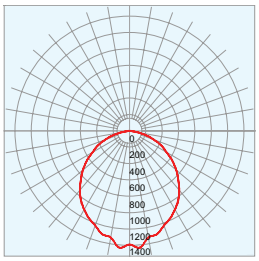

Batwing

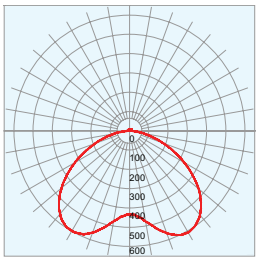

Asymmetric

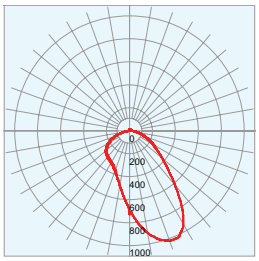

* Consult factory for High Output White channel 1200+ Lm/Ft
** Does not apply to Tunable White
*** See Starfire website for Product Limited Warranty

STARFIRE LIGHTING, INC.
7 Donna Drive, Wood-Ridge, NJ 07075
starfirelighting.com

P 201.438.9540
F 201.438.9541

All designs and drawings are the property of STARFIRE LIGHTING, INC. We reserve the right to make changes to specifications and approved designs at any time without notice to facilitate manufacturing methods to the extent that such changes do not compromise design integrity. All performance specifications are subject to +/- 10% deviation.