2" Louvered Multi-Cell LED Low Profile Slot - External Driver

LED



Linear Recessed Low Profile Slot with Fixed and Tilting Multi-Cell Louvered LEDs - External Driver

VLCX2

Job Name

Fixture Type

Standard Housing
(Grid Trim shown)

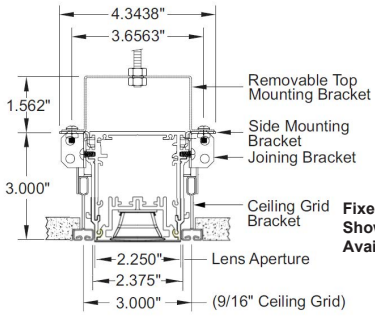

Fixed Module
Shown in Standard Housing
Available in all housings

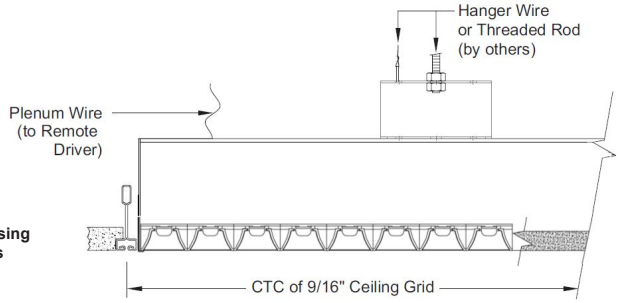

Retrofit Housing
(Flangeless Trim shown)

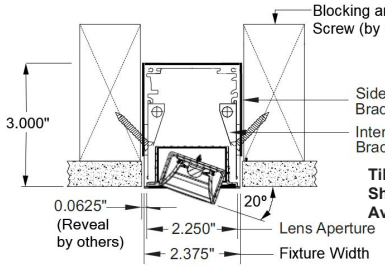

Tilt Module
Shown in Retrofit housing
Available in all housings

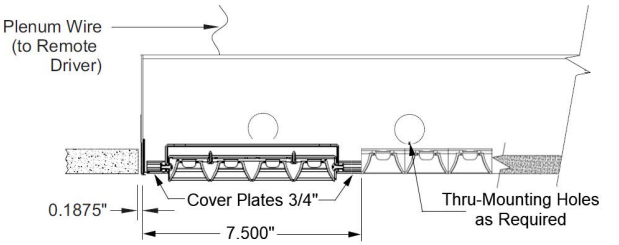

Ceiling Trim Details

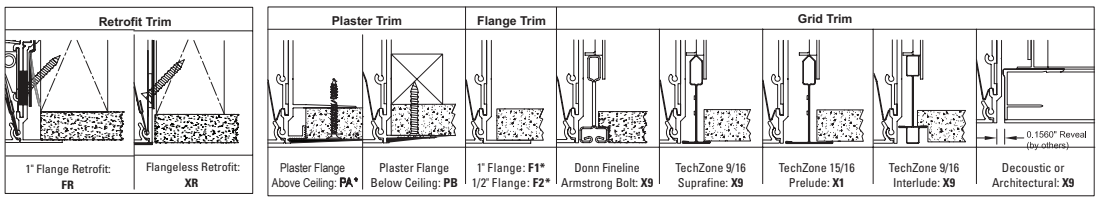

Remote Driver Enclosure

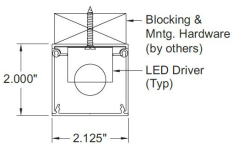

Profile
(2.000 H x 24.000" OAL)

VLCX2- ____ ____ ____ ____ - ____ ____ - ____ ____ - ____ ____ - ____

CRI	Color Temp	Output	Dimming	Beam Angle	Louver Finish	Length(")	Fixed -Tilt	Ceiling Trim	Fixture Finish	Whip
8 80+ **9** 90+	**27** 2700K **30** 3000K **35** 3500K **40** 4000K **TW** Tunable White (1)(2)	**200** **400** **600** **800** **1000** **1200** *Specify: Lm/Ft* (3)	**S** Std. 0-10V 1% **O** Dim-to-Off **L** Lutron (3) **D** DALI 1% **P** PoE (3) **W** Wireless (3) **2** 2 Wire (Phase cut) **T** Step (10% - 70%)	**5C** 50° Clear **5D** 50° Diffuser **8C** 80° Clear **8D** 80° Diffuser	**W** White, Std. **B** Black **V** Silver	*Nominal:* **24 36 48** **60 72 84** **96** *(see Pg 2)* *Custom:* **Cxxx** *(in inches, see Pg 2)*	**F** All fixed (Std.) **T** All Tilt **C** Combo *Custom: Specify* ***F# / T#*** *# is number of modules*	**PA** Plaster Flange Above * **PB** Plaster Flange Below **F1** Flange 1" * **F2** Flange 1/2" * **X9** 9/16 Grid Trim **X1** 15/16 Grid Trim **Cxx/yy** *Custom: Multiple Trims available, Consult factory.*	**W** White, Std. **B** Black *Custom:* *Specify RAL#*	**N** No Whip **W** Std. Whip **C** Chicago Whip

* Fixture must be installed before ceiling

Product Code Example: **VLCX2-830600S-5DB-C120F12/T8-PA-B-N**

The VLCX2 utilizes the latest high performance LEDs configured in recessed integrated louvers creating a "Dark Light" effect with a UGR < 19 and external driver. Clusters of 4 cells are available in fixed (6") or adjustable angle (7.5") configurations for directional light distribution. Cells have individual lens at 2 beam angles with or without diffusion. Louvers are available in 3 finishes.

Features

- Extremely low Unified Glare Rating meets stringent code requirements.
- Continuous recessed louvers with Multi-Cell LEDs fill the entire fixture length creating uniform light distribution without glare.
- Numerous beam angle, CCT and CRI options, plus louver color, offer vast design flexibility.
- Tilt modules provide +/- 20 degree rotation for precise illumination.
- Louvered Multi-Cell LEDs can be added in 6" increments.
- Ultra-efficient, high output chips deliver > 1200 lm/ft.
- High efficiency, low cost, dynamic Tunable White option.

Fixture Specifications

- Housing/Trim: Heavy-duty extruded aluminum.
- Finish: White (std), custom available.
- Weight: Approx. 3.2 lbs per linear foot.
- UL Listed, (indoor not-condensing) & CCEA Approved.

Electrical

- Power consumption: Per specification based on LED configuration.
- Input Voltage: 120-277V universal driver.
- Ambient temperature: -4 °F to 100 °F maximum.
- Remote electronic drivers.
- Class 2 Plenum wiring between fixture and remote driver.
- Dimming: 0-10V 1% standard, contact factory for options.

LED Specifications/Photometry: Page 2

Mounting

- Universal mounting brackets provided. Contact factory for alternate mounting.
- Driver enclosure will supply one fixture. Contact factory for other configurations.

Ceiling Cutout: Page 3 for fixed (consult factory for Tilt).

Options (Consult factory)

- Occupancy sensor w/ integral photocell for night only operation.
- Daylight harvesting dimming control.
- EM battery pack. Delivers 1000+ total lumens for 90 mins (depending upon configuration). 4ft segments (std). Specify segment length and location at time of order.
- HVAC, fire sprinkler, surveillance or public address systems integration.
- BAA/BABA compliance for some configurations – factory will advise.

(1) 90 CRI, 2700K-6500K std., others available. Specify CCT range.
(2) 0-10V Control, std., others available – Specify (Factory to confirm).
(3) Specify - Factory to confirm.

STARFIRE LIGHTING, INC.
7 Donna Drive, Wood-Ridge, NJ 07075
starfirelighting.com
P 201.438.9540
F 201.438.9541

All designs and drawings are the property of STARFIRE LIGHTING, INC. We reserve the right to make changes to specifications and approved designs at any time without notice to facilitate manufacturing methods to the extent that such changes do not compromise design integrity. All performance specifications are subject to +/- 10% deviation.

Multi-Cell LED Technology

- Choice of standard lumen output levels: 200, 400, 600, 800, 1000, 1200 or specify custom (between 200 and 1500 Lm/Ft)*
- LED Efficiency: Up to 204 Lm/Wt at 80+ CRI.
- Multi-Chip LED per cell for uniform color and intensity.
- Color Consistency: Equal or better than 3 SCDM.
- L70: 50,000+ hours at Max. output.
- 5 year limited warranty**
- Custom overall fixture length is available at any length including continuous runs.
- Multi-Cell lighting modules available in length increments of 6" for fixed modules, 7.5" for tilt modules (filler plates required).
- When lighting module length is less than overall length, filler plates will be provided at the ends.

Fixture Efficacy

50° Beam, Clear Lens – White Louver

80 CRI	4000K		3500K		3000K		2700K (90 CRI)	
Lm/Ft	Wt/Ft	Lm/Wt	Wt/Ft	Lm/Wt	Wt/Ft	Lm/Wt	Wt/Ft	Lm/Wt
200	1.2	181.4	1.1	178.4	1.2	170.8	1.2	161.2
400	2.2	177.8	2.3	174.8	2.4	167.2	2.5	157.5
600	3.4	174.2	3.5	171.1	3.7	163.5	3.9	153.9
800	4.7	170.5	4.8	167.5	5.0	159.9	5.3	150.2
1000	6.0	166.9	6.1	163.8	6.4	156.2	6.8	146.6
1200	7.4	163.2	7.5	160.2	7.9	152.6	8.4	143.0

50° Beam

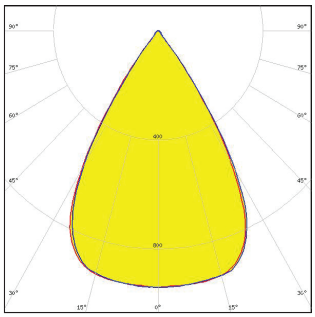

80° Beam, Clear Lens – White Louver

80 CRI	4000K		3500K		3000K		2700K (90 CRI)	
Lm/Ft	Wt/Ft	Lm/Wt	Wt/Ft	Lm/Wt	Wt/Ft	Lm/Wt	Wt/Ft	Lm/Wt
200	1.1	181.4	1.1	178.4	1.2	170.8	1.2	161.2
400	2.2	177.8	2.3	174.8	2.4	167.2	2.5	157.5
600	3.4	174.2	3.5	171.1	3.7	163.5	3.9	153.9
800	4.7	170.5	4.8	167.5	5.0	159.9	5.3	150.2
1000	6.0	166.9	6.1	163.8	6.4	156.2	6.8	146.6
1200	7.4	163.2	7.5	160.2	7.9	152.6	8.4	143.0

80° Beam

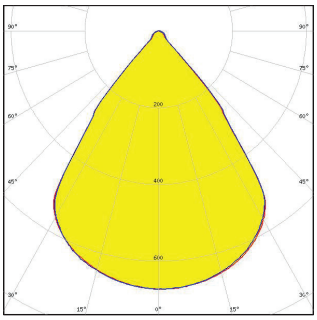

* Depending upon configuration, consult factory

** See Starfire website for Product Limited Warranty

STARFIRE LIGHTING, INC.
7 Donna Drive, Wood-Ridge, NJ 07075
starfirelighting.com

P 201.438.9540
F 201.438.9541

All designs and drawings are the property of STARFIRE LIGHTING, INC. We reserve the right to make changes to specifications and approved designs at any time without notice to facilitate manufacturing methods to the extent that such changes do not compromise design integrity. All performance specifications are subject to +/- 10% deviation.

Ceiling Dimensions

Grid Ceiling

Length dimensions for fixed modules. Consult Factory when tilt modules are used.

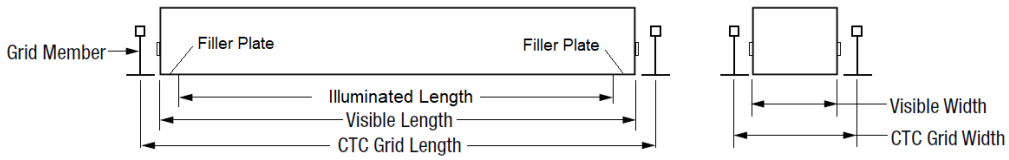

	9/16", Don Fineline, Decoustic					15/16"				
Order CTC Grid Length	Visible Length	Visible Width	CTC Grid Width	Illuminated Length	Filler Plate	Visible Length	Visible Width	CTC Grid Width	Illuminated Length	Filler Plate
24"	23 3/8"	2 3/8"	3"	18"	2 11/16"	23"	2 3/8"	3 3/8"	18"	2 1/2"
30"	29 3/8"	2 3/8"	3"	24"	2 11/16"	29"	2 3/8"	3 3/8"	24"	2 1/2"
36"	35 3/8"	2 3/8"	3"	30"	2 11/16"	35"	2 3/8"	3 3/8"	30"	2 1/2"
48"	47 3/8"	2 3/8"	3"	42"	2 11/16"	47"	2 3/8"	3 3/8"	42"	2 1/2"
60"	59 3/8"	2 3/8"	3"	54"	2 11/16"	59"	2 3/8"	3 3/8"	54"	2 1/2"
72"	71 3/8"	2 3/8"	3"	66"	2 11/16"	71"	2 3/8"	3 3/8"	66"	2 1/2"
84"	81 3/8"	2 3/8"	3"	78"	2 11/16"	83"	2 3/8"	3 3/8"	78"	2 1/2"
90"	89 3/8"	2 3/8"	3"	84"	2 11/16"	89"	2 3/8"	3 3/8"	84"	2 1/2"
96"	95 3/8"	2 3/8"	3"	90"	2 11/16"	95"	2 3/8"	3 3/8"	90"	2 1/2"

Custom Fixture Length Example:

A 24" Nominal Order Length yields a 23 3/8" Visible Length.
For a 24" Visible Length, order a Custom Length of 24 5/8".

See charts below for length adjustments per trim type.

Solid Ceiling

Length dimensions for fixed modules. Consult Factory when tilt modules are used

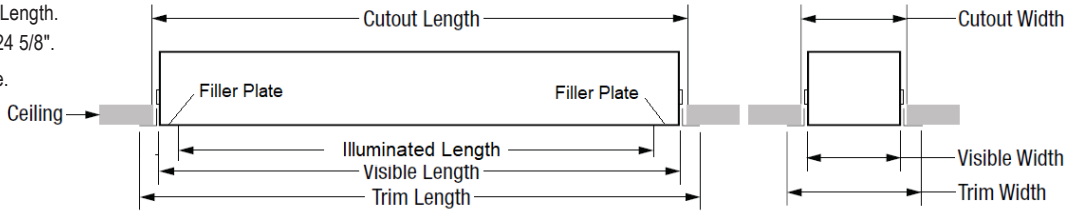

					Plaster Flange				1" Flange[1]				Retrofit 1" Flange[2]			
Nominal Order Length	Visible Length	Illuminated Length	Filler Plate	Visible Width	Trim Length	Trim Width	Cutout Length	Cutout Width	Trim Length	Trim Width	Cutout Length	Cutout Width	Trim Length	Trim Width	Cutout Length	Cutout Width
24"	24 3/8"	24"	NR	2 3/8"	27 15/16"	5 3/32"	25 7/16"	3 1/4"	25 15/16"	4 1/8"	25 1/4"	3 1/4"	25 15/16"	4 1/8"	24 1/2"	3 1/4"
30"	30 3/8"	30"	NR	2 3/8"	33 15/16"	5 3/32"	31 7/16"	3 1/4"	31 15/16"	4 1/8"	31 1/4"	3 1/4"	31 15/16"	4 1/8"	30 1/2"	3 1/4"
36"	36 3/8"	42"	NR	2 3/8"	39 15/16"	5 3/32"	37 7/16"	3 1/4"	37 15/16"	4 1/8"	37 1/4"	3 1/4"	37 15/16"	4 1/8"	36 1/2"	3 1/4"
48"	48 3/8"	54"	NR	2 3/8"	51 15/16"	5 3/32"	49 7/16"	3 1/4"	49 15/16"	4 1/8"	49 1/4"	3 1/4"	49 15/16"	4 1/8"	48 1/2"	3 1/4"
60"	60 3/8"	66"	NR	2 3/8"	63 15/16"	5 3/32"	61 7/16"	3 1/4"	61 15/16"	4 1/8"	61 1/4"	3 1/4"	61 15/16"	4 1/8"	60 1/2"	3 1/4"
72"	72 3/8"	78"	NR	2 3/8"	75 15/16"	5 3/32"	73 7/16"	3 1/4"	73 15/16"	4 1/8"	73 1/4"	3 1/4"	73 15/16"	4 1/8"	72 1/2"	3 1/4"
84"	84 3/8"	84"	NR	2 3/8"	87 15/16"	5 3/32"	85 7/16"	3 1/4"	85 15/16"	4 1/8"	85 1/4"	3 1/4"	85 15/16"	4 1/8"	84 1/2"	3 1/4"
90"	90 3/8"	90"	NR	2 3/8"	93 15/16"	5 3/32"	91 7/16"	3 1/4"	85 15/16"	4 1/8"	91 1/4"	3 1/4"	91 15/16"	4 1/8"	90 1/2"	3 1/4"
96"	96 3/8"	96"	NR	2 3/8"	99 15/16"	5 3/32"	97 7/16"	3 1/4"	91 15/16"	4 1/8"	97 1/4"	3 1/4"	97 15/16"	4 1/8"	96 1/2"	3 1/4"
Custom Order Length	Order Length + 3/8"	Nearest 6" < Visible Length	Consult Factory	2 3/8"	Order Length + 3 15/16"	5 3/32"	Order Length +1 7/16"	3 1/4"	Order Length +1 5/16"	4 1/8"	Order Length + 1 1/4"	3 1/4"	Order Length + 1 15/16"	4 1/8"	Order Length + 1/2"	3 1/4"

					Grid Trim[3]				Retrofit Flangeless			
Nominal Order Length	Visible Length	Illuminated Length	Filler Plate	Visible Width	Visible Length	Visible Width	Cutout Length	Cutout Width	Trim Length	Trim Width	Cutout Length	Cutout Width
24"	24 3/8"	24"	NR	2 3/8"	24 3/8"	2 3/8"	24 3/4"	2 1/2"	24 3/8"	2 3/8"	24 3/4"	3 1/4"
30"	30 3/8"	30"	NR	2 3/8"	30 3/8"	2 3/8"	30 3/4"	2 1/2"	30 3/8"	2 3/8"	30 3/4"	3 1/4"
36"	36 3/8"	42"	NR	2 3/8"	36 3/8"	2 3/8"	36 3/4"	2 1/2"	36 3/8"	2 3/8"	36 3/4"	3 1/4"
48"	48 3/8"	54"	NR	2 3/8"	48 3/8"	2 3/8"	48 3/4"	2 1/2"	48 3/8"	2 3/8"	48 3/4"	3 1/4"
60"	60 3/8"	66"	NR	2 3/8"	60 3/8"	2 3/8"	60 3/4"	2 1/2"	60 3/8"	2 3/8"	60 3/4"	3 1/4"
72"	72 3/8"	78"	NR	2 3/8"	72 3/8"	2 3/8"	72 3/4"	2 1/2"	72 3/8"	2 3/8"	72 3/4"	3 1/4"
84"	84 3/8"	84"	NR	2 3/8"	84 3/8"	2 3/8"	84 3/4"	2 1/2"	84 3/8"	2 3/8"	84 3/4"	3 1/4"
90"	90 3/8"	90"	NR	2 3/8"	90 3/8"	2 3/8"	90 3/4"	2 1/2"	90 3/8"	2 3/8"	90 3/4"	3 1/4"
96"	96 3/8"	96"	NR	2 3/8"	96 3/8"	2 3/8"	96 3/4"	2 1/2"	96 3/8"	2 3/8"	96 3/4"	3 1/4"
Custom Order Length	Order Length + 3/8"	Nearest 6" < Visible Length	Consult Factory	2 3/8"	Order Length + 3/8"	2 3/8"	Order Length + 3/4"	2 1/2"	Order Length + 3/8"	2 3/8"	Order Length + 3/4"	3 1/4"

For lengths over 96" and for use of tilting modules, consult factory regarding dimensions.

[1] Fixture must be installed before ceiling.
[2] Fixture may be installed after ceiling.
[3] Grid Trim typically installed before ceiling

STARFIRE LIGHTING, INC.
7 Donna Drive, Wood-Ridge, NJ 07075
starfirelighting.com

P 201.438.9540
F 201.438.9541

All designs and drawings are the property of STARFIRE LIGHTING, INC. We reserve the right to make changes to specifications and approved designs at any time without notice to facilitate manufacturing methods to the extent that such changes do not compromise design integrity. All performance specifications are subject to +/- 10% deviation.