2" VersaLux LED Perimeter Wet Location Slot

LED

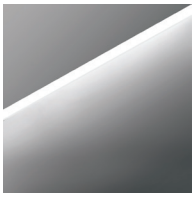

Linear LED Perimeter Slot with Regressed Snap-in Lens suitable for Wet Locations

VRPW2

Job Name

Fixture Type

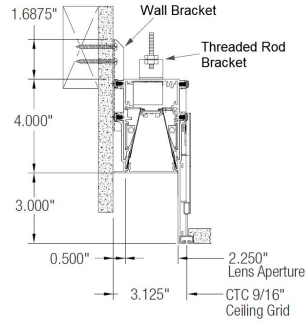

Profile - 3" Regressed Lens

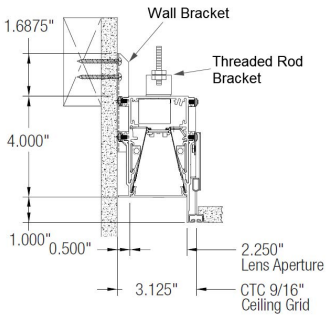

Profile - 1" Regressed Lens

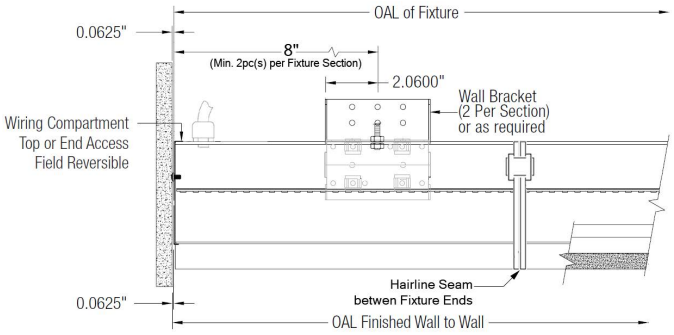

1" Regressed Lens (Ref)

Wall Trim Detail

Flange	Reveal
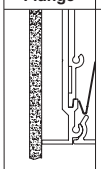	
Flush to Wall: **F**	Reveal to Wall: **X**

Ceiling Trim Detail (1" Regressed Lens shown)

Plaster Trim	Flange Trim		Grid Trim				
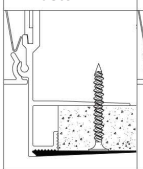	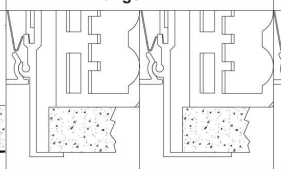		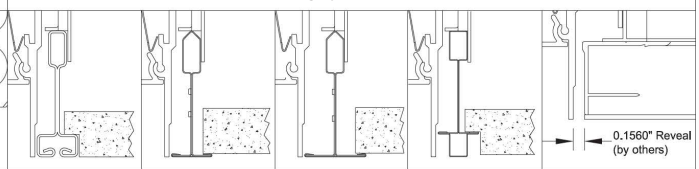				
Plaster Flange Above Ceiling: **PA** *	1/2" Flange Trim: **F2** *	1" Flange Trim: **F1** *	Donn Fineline Armstrong Bolt: **X9**	TechZone 9/16 Suprafine: **X9**	TechZone 15/16 Prelude: **X1**	TechZone 9/16 Interlude: **X9**	Decoustic Wood: **X9**

0.1560" Reveal (by others)

VRPW2-L ____ ____ ____ ____ ____ - ____ - ____ - ____ - ____ ____

CRI	Color	Output	Dimming	Lens Depth	Length(")	Wall Trim	Ceiling Trim	Cbl. Feed	Finish
8 80+ **9** 90+ **R** RGB & RGBW	**27** 2700K (90 CRI only) **30** 3000K **35** 3500K **40** 4000K **TW** Tunable White (1)(2) **DW** Dim-to-Warm (1)(2) **GB** RGB Color **G3** RGBW White 3000K	**S** Standard **H** High **M** Maximum *Custom: Specify Lm/Ft* (3) **F** *Fixed for RGB & RGBW*	**S** Std. 0-10V 1% (1)(2) **O** Dim-to-Off (1)(2) **H** ECO 1% **D** DALI 1% (3) **P** POE (3) **2** Wire *(phase cut)* **T**Step *(10%-70%)* **W** Wireless (3) **X** DMX for RGBs	**1** 1" Regressed **2** 2" Regressed (4) *(X Trim only)* **3** 3" Regressed (4)	*Nominal:* **24 36 48** **60 72 84** **96** *(see Page 3)* *Custom:* **Cxxx** *(in inches)*	**F** Flange **X** Reveal	**PA** Plaster Flange Above * **F1** Flange 1" * **F2** Flange 1/2" * **X9** 9/16 Grid Trim **X1** 15/16 Grid Trim	**T** Top, Std. **E** End	**W** White **B** Black **C** Custom Provide RAL#

*** Fixture must be installed before ceiling**

Product Code Example: **VRPW2-L830HS1-C120-F-F1-TW**

A wet location, low profile, perimeter slot creates an illuminated halo at the wall to ceiling transition as it baths the wall and casts a wash of light into the open space. The linear perimeter slot utilizes high performance LED boards, snap-in regressed lenses, and full reflectors. Special sealants and gaskets allow use in wet locations (horizontal mount lens facing down). Choice of 1", 2" (4) or 3" (4) regressed lens depth. Wall flange with Ceiling Flange or Ceiling Plaster trim options allow closure of the fixture to adjacent interfaces preventing water incursion, if required.

Features

- Starfire's proprietary EvenGlow™ system provides uniform illumination from end-to-end without lamp imaging, bright spots or shadows at any length.
- Fixtures fabricated to any length without custom engineering, maximum 96" per section.
- Multiple sections can be joined having a single power feed.
- Sealed lens at section joints prevent wind dislodgement and dirt/insect incursion.
- Exceptional lumen per watt efficiency.
- High efficiency, low cost, Tunable White and Dim-to- Warm options.
- RGB & RGBW (White 3000K) option.
- Quick-Connect lighting modules plug together.
- Combine with welded corner Connectors to form small or large scaled patterns.

Fixture Specifications

- Housing/Trim: Heavy-duty extruded aluminum.
- Finish: White (std), custom available.
- Weight: Approx. 3.4 lbs. per linear foot
- UL Listed, Wet Location.
- IP65 design rating.

Electrical

- Power consumption: Per specification based on LED configuration.
- Input Voltage: 120-277V universal driver.
- Ambient temperature: 100 °F maximum.
- Integral electronic drivers.
- DMX decoder & power supply in external Starfire provided enclosure. Optional NEMA wet version available.
- Integral wiring bus between fixture sections.
- Dimming: 0-10V 1% standard, contact factory for options.
- RGB/W Dimming: DMX only.

Mounting

- Mounting brackets provided. Contact factory for alternate mounting.

Options (Consult factory)

- Occupancy sensor, daylight control module (5)
- EM pack in 4ft segments Delivers 800+ total lumens for 90 mins. Specify location (+/- 2ft) at time of order. Status Indicator/Test Button in remote water tight box with clear cover.
- BAA/BABA compliance for some configurations – factory will advise.

LED Specifications/Photometry: Page 2

Ceiling Cutout: Refer to page 3

(1) 90 CRI, 2700K-6500K std., others available. Specify CCT range.
(2) 0-10V Control std.,others available - Specify (Factory to confirm).
(3) Specify (Factory to confirm).
(4) 2" aperture with deep regress reduces maintenance access.
(5) Sensor must be wet location rated.

STARFIRE LIGHTING, INC.
7 Donna Drive, Wood-Ridge, NJ 07075
starfirelighting.com

P 201.438.9540
F 201.438.9541

All designs and drawings are the property of STARFIRE LIGHTING, INC. We reserve the right to make changes to specifications and approved designs at any time without notice to facilitate manufacturing methods to the extent that such changes do not compromise design integrity. All performance specifications are subject to +/- 10% deviation.

White LEDs

High output edge-to-edge, end-to-end illumination

- Choice of lumen output levels:
  S: Standard, **H:** High, **M:** Maximum,
  C: Custom (between 200 and 1100 Lm/Ft) depending upon configuration.
  High output option*: Up to 1800 Lm/Ft, consult factory.
- LED Efficiency: Up to 160 Lm/Wt at Max. output and 180 Lm/Wt at Standard power (at 80+ CRI).
- Proprietary in-house, ultra-tight Vf binned LEDs for uniform intensity.
- Color Consistency**: Equal or better than 3 SCDM.
- L70: 50,000+ hours at Max. output.
- 5 year limited warranty***

Tunable White LEDS

- Choice of lumen output levels:
  S: Standard, **H:** High, **M:** Maximum,
  C: Custom (between 200 and 1100 Lm/Ft) depending upon configuration.
- LED Efficiency: Up to 160 Lm/Wt at Max. output and 180 Lm/Wt at Standard power (at 80+ CRI).
- Proprietary in-house, ultra-tight Vf binned LEDs for uniform intensity.
- Color Consistency**: Equal or better than 3 SCDM.
- Tunable range - 2700K to 6500K, other ranges available.
- Dim to Warm option range down to 1800K.
- L70: 50,000+ hours at Max. output.
- 5 year limited warranty***

1" Regressed Lens

80 CRI		4000		3500		3000		2700 (90 CRI)	
Settings	Lm/ft	Wt/Ft	Lm/Wt	Wt/Ft	Lm/Wt	Wt/Ft	Lm/Wt	Wt/Ft	Lm/Wt
S	400	3.6	110.2	3.7	107.1	3.8	104.0	4.2	96.3
H	700	6.6	106.1	6.8	103.0	7.0	99.9	7.7	91.4
M	850	8.2	104.1	8.4	101.0	8.7	97.9	9.6	88.9

LV6

3" Regressed Lens

80 CRI		4000		3500		3000		2700 (90 CRI)	
Settings	Lm/ft	Wt/Ft	Lm/Wt	Wt/Ft	Lm/Wt	Wt/Ft	Lm/Wt	Wt/Ft	Lm/Wt
S	400	4.0	99.8	4.1	97.0	4.2	94.1	4.6	87.0
H	600	6.2	97.1	6.4	94.2	6.6	91.4	7.2	83.8
M	800	8.5	94.3	8.7	91.5	9.0	88.7	9.9	80.5

LV6

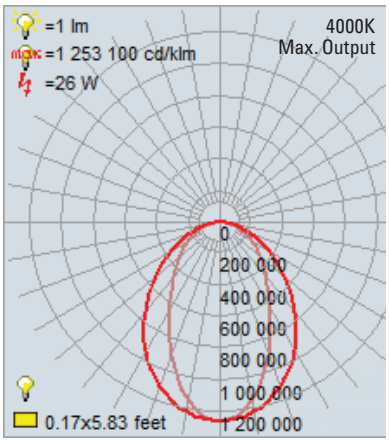

RGB & RGBW LEDs

1" Regressed Lens

	Lm/Ft	Wt/Ft	Lm/Wt
RGB (all on)	**135**	9.4	14.4
White	**419**	6.8	61.4
RGBW (all on)	**555**	16.2	34.2

3" Regressed Lens

	Lm/Ft	Wt/Ft	Lm/Wt
RGB (all on)	**123**	9.4	13.1
White	**382**	6.8	55.9
RGBW (all on)	**505**	16.2	31.1

Output adjustable with DMX-512 Control

RGBW LEDs

- DMX mixing and intensity control.
- LED Efficiency: Up to 80 Lm/Wt White at Max. output.
- High Output Hybrid option static white + RGB.
- DMX 512 Decoder with PWM LED control.
- CV power supply.
- Decoder and power supply may be remote (up to 35 feet).
- 5 year limited warranty***

* Consult factory for High Output White channel 1200+ Lm/Ft
** Does not apply to Tunable White
*** See Starfire website for Product Limited Warranty

STARFIRE LIGHTING, INC.
7 Donna Drive, Wood-Ridge, NJ 07075
starfirelighting.com
P 201.438.9540
F 201.438.9541

All designs and drawings are the property of STARFIRE LIGHTING, INC. We reserve the right to make changes to specifications and approved designs at any time without notice to facilitate manufacturing methods to the extent that such changes do not compromise design integrity. All performance specifications are subject to +/- 10% deviation.

Perimeter LED Slot, Regressed Snap-in Lens for Wet Locations

VRPW2

Ceiling Dimensions

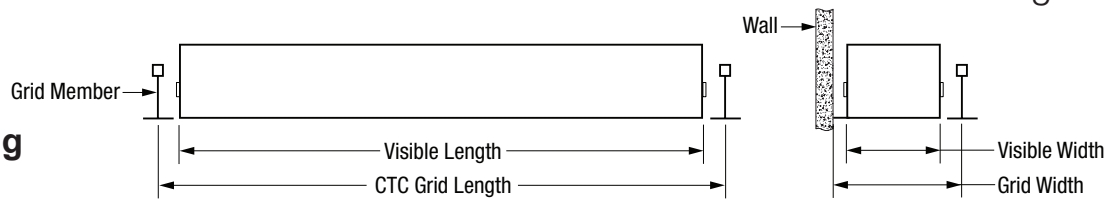

Grid Ceiling
Dimensions

	9/16", Don Fineline, Decoustic			15/16"		
Order CTC Grid Length	**Visible Length**	**Visible Width**	**Grid Width**	**Visible Length**	**Visible Width**	**Grid Width**
24"	23 3/8"	2 3/8"	3 1/8"	23"	2 3/8"	3 5/16"
30"	29 3/8"	2 3/8"	3 1/8"	29"	2 3/8"	3 5/16"
36"	35 3/8"	2 3/8"	3 1/8"	35"	2 3/8"	3 5/16"
48"	47 3/8"	2 3/8"	3 1/8"	47"	2 3/8"	3 5/16"
60"	59 3/8"	2 3/8"	3 1/8"	59"	2 3/8"	3 5/16"
72"	71 3/8"	2 3/8"	3 1/8"	71"	2 3/8"	3 5/16"
84"	83 3/8"	2 3/8"	3 1/8"	83"	2 3/8"	3 5/16"
90"	89 3/8"	2 3/8"	3 1/8"	89"	2 3/8"	3 5/16"
96"	95 3/8"	2 3/8"	3 1/8"	95"	2 3/8"	3 5/16"

Custom Fixture Length Example:

A 24" Nominal Order Length yields a 23 3/8" Visible Length.
For a 24" Visible Length, order a Custom Length of 24 5/8".
See charts below for length adjustments per trim type.

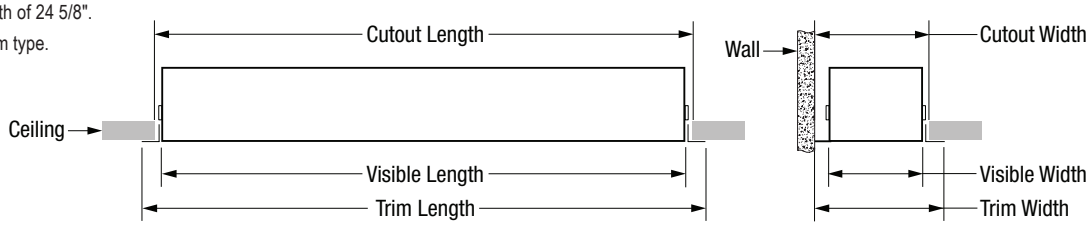

Solid Ceiling
Dimensions
Fixture must be installed before ceiling

			Plaster Flange				1" Flange			
Nominal Order Length	**Visible Length**	**Visible Width**	**Trim Length**	**Trim Width**	**Cutout Length**	**Cutout Width**	**Trim Length**	**Trim Width**	**Cutout Length**	**Cutout Width**
24"	23 3/8"	2 3/8"	26 3/32"	4 3/16"	24 1/4"	3 1/4"	25 1/8"	3 11/16"	24 1/4"	3 1/4"
30"	29 3/8"	2 3/8"	32 3/32"	4 3/16"	30 1/4"	3 1/4"	31 1/8"	3 11/16"	30 1/4"	3 1/4"
36"	35 3/8"	2 3/8"	38 3/32"	4 3/16"	36 1/4"	3 1/4"	37 1/8"	3 11/16"	36 1/4"	3 1/4"
48"	47 3/8"	2 3/8"	50 3/32"	4 3/16"	48 1/4"	3 1/4"	49 1/8"	3 11/16"	48 1/4"	3 1/4"
60"	59 3/8"	2 3/8"	62 3/32"	4 3/16"	60 1/4"	3 1/4"	61 1/8"	3 11/16"	60 1/4"	3 1/4"
72"	71 3/8"	2 3/8"	74 3/32"	4 3/16"	72 1/4"	3 1/4"	73 1/8"	3 11/16"	72 1/4"	3 1/4"
84"	83 3/8"	2 3/8"	86 3/32"	4 3/16"	84 1/4"	3 1/4"	85 1/8"	3 11/16"	84 1/4"	3 1/4"
90"	89 3/8"	2 3/8"	92 3/32"	4 3/16"	90 1/4"	3 1/4"	91 1/8"	3 11/16"	90 1/4"	3 1/4"
96"	95 3/8"	2 3/8"	98 3/32"	4 3/16"	96 1/4"	3 1/4"	97 1/8"	3 11/16"	96 1/4"	3 1/4"
Custom Order Length	Order Length – 5/8"	2 3/8"	Order Length + 2 3/32"	4 3/16"	Order Length + 1/4"	3 1/4"	Order Length + 1 1/8"	3 11/16"	Order Length + 1/4"	3 1/4"

			1/2" Flange				Grid Trim (No Flange)			
Nominal Order Length	**Visible Length**	**Visible Width**	**Trim Length**	**Trim Width**	**Cutout Length**	**Cutout Width**	**Trim Length**	**Trim Width**	**Cutout Length**	**Cutout Width**
24"	23 3/8"	2 3/8"	24 3/16"	3 7/32"	24 1/4"	3 1/4"	23 3/8"	2 13/16"	23 1/2"	2 7/8"
30"	29 3/8"	2 3/8"	30 3/16"	3 7/32"	30 1/4"	3 1/4"	29 3/8"	2 13/16"	29 1/2"	2 7/8"
36"	35 3/8"	2 3/8"	36 3/16"	3 7/32"	36 1/4"	3 1/4"	35 3/8"	2 13/16"	35 1/2"	2 7/8"
48"	47 3/8"	2 3/8"	48 3/16"	3 7/32"	48 1/4"	3 1/4"	47 3/8"	2 13/16"	47 1/2"	2 7/8"
60"	59 3/8"	2 3/8"	60 3/16"	3 7/32"	60 1/4"	3 1/4"	59 3/8"	2 13/16"	59 1/2"	2 7/8"
72"	71 3/8"	2 3/8"	72 3/16"	3 7/32"	72 1/4"	3 1/4"	71 3/8"	2 13/16"	71 1/2"	2 7/8"
84"	83 3/8"	2 3/8"	84 3/16"	3 7/32"	84 1/4"	3 1/4"	83 3/8"	2 13/16"	83 1/2"	2 7/8"
90"	89 3/8"	2 3/8"	90 3/16"	3 7/32"	90 1/4"	3 1/4"	89 3/8"	2 13/16"	89 1/2"	2 7/8"
96"	95 3/8"	2 3/8"	96 3/16"	3 7/32"	96 1/4"	3 1/4"	95 3/8"	2 13/16"	95 1/2"	2 7/8"
Custom Order Length	Order Length – 5/8"	2 3/8"	Order Length + 3/16"	3 7/32"	Order Length + 1/4"	3 1/4"	Order Length – 5/8"	2 13/16"	Order Length – 1/2"	2 7/8"

For lengths over 96", consult factory regarding cutout dimensions

starfire
STARFIRE LIGHTING, INC.
7 Donna Drive, Wood-Ridge, NJ 07075
starfirelighting.com
P 201.438.9540
F 201.438.9541

All designs and drawings are the property of STARFIRE LIGHTING, INC. We reserve the right to make changes to specifications and approved designs at any time without notice to facilitate manufacturing methods to the extent that such changes do not compromise design integrity. All performance specifications are subject to +/- 10% deviation.