1" Lite-Stix Flush Lens Pendant

LED



Linear Narrow Profile LED Direct "Floating" Pendant with Flush Lens

PDLX1

Job Name

Fixture Type

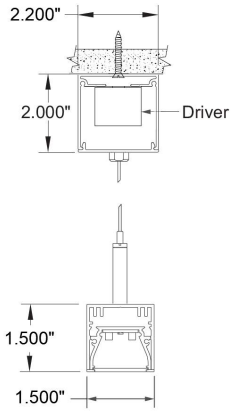

Linear Canopy
Profile

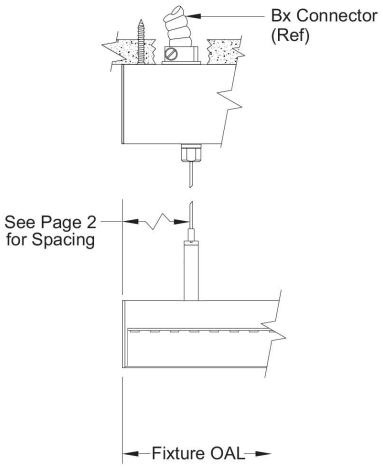

Linear Canopy
Cross Section

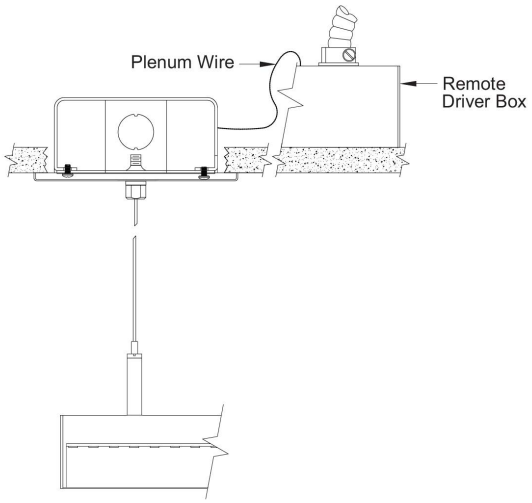

Round/Square Canopy (Ref)
Cross Section

PDLX1-L ☐☐☐ - ☐☐☐ - ☐☐☐ - ☐☐☐ ☐☐☐ - ☐☐☐ / ☐☐☐

CRI	Color Temp	Output	Dimming[2]	Length (inches)	Lens	Canopy Type	Fixture Finish	Canopy Finish
8 80+ **9** 90+	**27** 2700K *(90 CRI only)* **30** 3000K **35** 3500K **40** 4000K	**S** Std. **H** High **M** Max. *Custom: Specify Lm/Ft[1]*	**S** Std. 0-10V 1% **L** Lutron[1] **D** DALI 1% **P** PoE[1] **W** Wireless[1] **2** 2 Wire	*Nominal:* **24**[2] **36** **48** **60** **72** **84** **96** *(see Page 2)*	**DF** Diffuser **BW** Batwing **LS** Louver Specular	**L** Linear, Std. *(Integral Driver)* **R** Round *(Remote Driver)* **S** Square *(Remote Driver)*	**W** White, Std. **B** Black *Custom: Specify RAL#*	**W** White, Std. **B** Black *Custom: Specify RAL#*

Product Code Example: **PDLX1-L830H-S-36-DFR-W/W**

Lite-Stix pendants create a "floating" light sculpture. Modules can be oriented in virtually any combination of lengths, height, and angles to create a high-impact visual statements in lobbies and other large-scale spaces. Ultra-thin, powered aircraft cables eliminate the need for SJ cords – as a result, the lighting modules appear to float in space. The PDLX1 utilizes a flush, full diffusion lens with baffle option. Countless design variations are possible when combined with other Lite-Stix profiles. The latest LED technology delivers low to high output controlled by most dimming protocols. Lite-Stix pendants can be dimmed independently.

Features

- Starfire's proprietary EvenGlow™ system provides uniform illumination from end-to-end without lamp imaging or bright spots.
- Exceptional lumen per watt efficiency.
- High performance extruded acrylic flush snap-in lens without shadowing or glare.
- Mix and match lengths and lens types for infinite design possibilities.
- Easy field adjustment for height and angles up to 45 degrees.

Fixture Specifications

- Housing: Heavy-duty extruded aluminum.
- Finish: White (std), Black and custom available.
- Weight: Approx. 0.9 lbs per linear foot.
- UL Listed, (indoor non-condensing).

Electrical

- Power consumption: Per specification based on LED configuration
- Input Voltage: 120-277V universal driver.
- Ambient operating range: -4 °F to +100 °F.
- Integral electronic drivers in linear canopies or remote enclosures for round and square canopies.
- 1% Dimming: 0-10V standard (included), consult factory for other options.
- 2 Wire Dimming: forward and reverse phase-cut.

Mounting

- Linear canopies, (std) surface mount to any structural surface. Power and dimming wires connect directly to linear canopy through suitable conduit.
- Round/Square canopies mount to ceiling junction box designed to support hanging loads with drivers in remote enclosures. Contact factory for special conditions.

Options

- EM pack in 4ft segments. Delivers 800+ total lumens for 90 mins (remote located).
- BAA/BABA compliance for some configurations - Factory to verify.

LED Specifications/Photometry: Page 2

[1] Specify - Factory to confirm
[2] Available in output levels of 450 lm/ft or greater only

STARFIRE LIGHTING, INC.
7 Donna Drive, Wood-Ridge, NJ 07075
starfirelighting.com
P 201.438.9540
F 201.438.9541

All designs and drawings are the property of STARFIRE LIGHTING, INC. We reserve the right to make changes to specifications and approved designs at any time without notice to facilitate manufacturing methods to the extent that such changes do not compromise design integrity. All performance specifications are subject to +/- 10% deviation.

PDLX1

LED Strip

- Choice of lumen output levels:
  S: Standard, **H:** High, **M:** Maximum, **C:** Custom (between 200 and 1000 Lm/Ft)
- LED Efficiency: Up to 160 Lm/Wt at Maximum output
  and 180 Lm/Wt at Standard power (at 80+ CRI)
- Proprietary in-house, ultra-tight Vf binned LEDs for uniform intensity
- Color Consistency: Equal or better than 3 SCDM with chip mixing
- L70: 50,000+ hours at Maximum output
- 5 year limited warranty*

Diffuser

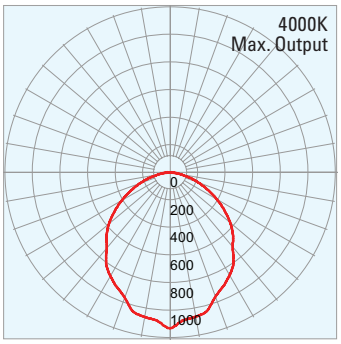

Batwing

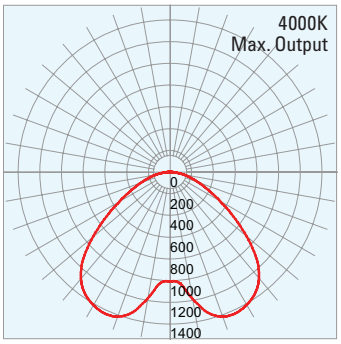

Diffuser

80 CRI		4000K		3500K		3000K		2700K (90 CRI)	
Output Setting	**Lm/Ft**	**Wt/Ft**	**Lm/Wt**	**Wt/Ft**	**Lm/Wt**	**Wt/Ft**	**Lm/Wt**	**Wt/Ft**	**Lm/Wt**
S Standard	**250**	1.8	142.0	1.8	140.7	1.8	136.7	2.0	126.6
H High	**500**	3.6	137.4	3.7	136.0	3.8	132.0	4.1	122.0
M Maximum	**750**	5.7	132.7	5.7	131.4	5.9	127.4	6.4	117.4

Batwing

80 CRI		4000K		3500K		3000K		2700K (90 CRI)	
Output Setting	**Lm/Ft**	**Wt/Ft**	**Lm/Wt**	**Wt/Ft**	**Lm/Wt**	**Wt/Ft**	**Lm/Wt**	**Wt/Ft**	**Lm/Wt**
S Standard	**250**	1.8	138.3	1.8	137.0	1.9	133.1	2.0	123.3
H High	**500**	3.7	133.7	3.8	132.4	3.9	128.5	4.2	118.7
M Maximum	**750**	5.8	129.1	5.9	127.8	6.1	123.9	6.6	114.1

Fixture Dimensions

Fixture Overal Length		Linear Canopy	Cable Spacing	Fixture End to Cable
Nominal	**Exact**	**Exact Length**	**Exact Length**	**Exact Length**
24"	22.60"	15"	13"	4.8"
36"	33.62"	18"	16"	8.8"
48"	44.65"	24"	22"	11.3"
60"	55.67"	36"	34"	10.8"
72"	72.20"	36"	34"	19.0"
84"	83.22"	48"	46"	18.6"
96"	94.25"	48"	46"	24.1"

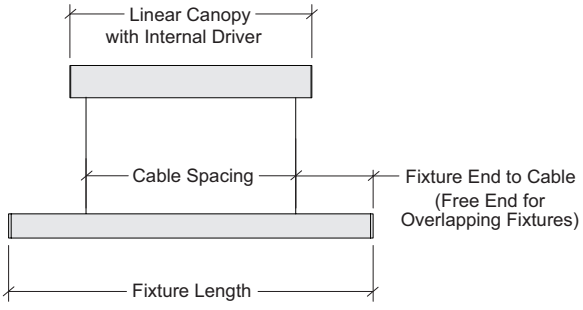

* See Starfire website for Product Limited Warranty

STARFIRE LIGHTING, INC.
7 Donna Drive, Wood-Ridge, NJ 07075
starfirelighting.com
P 201.438.9540
F 201.438.9541

All designs and drawings are the property of STARFIRE LIGHTING, INC. We reserve the right to make changes to specifications and approved designs at any time without notice to facilitate manufacturing methods to the extent that such changes do not compromise design integrity. All performance specifications are subject to +/- 10% deviation.