6" VersaLux LED Pendant



LED Linear Direct Pendant with Open Aperture Adjustable LED Downlight Modules

PDA6

Job Name	
Fixture Type	

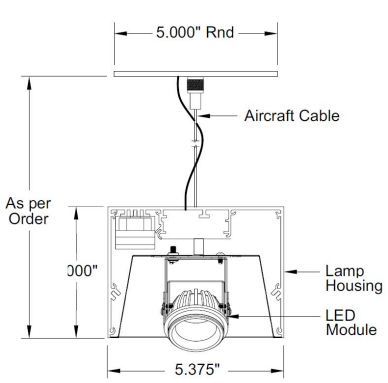

LED Downlight Compartment Profile View

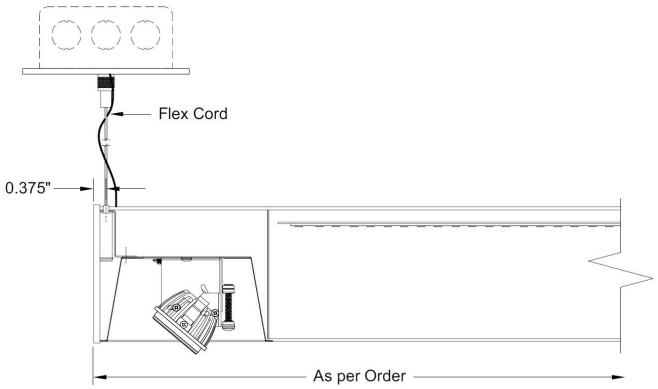

Sectional Side View

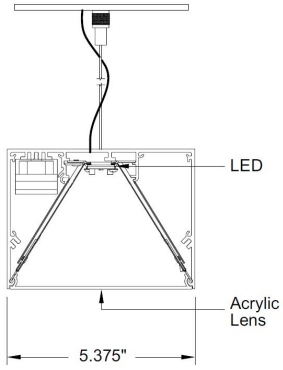

Linear LED Compartment Profile View

PDA6- [ ] D [ ] [ ] [ ] [ ] [ ] -L [ ] [ ] [ ] [ ] -

LED DOWNLIGHT

Qty	CRI	Color Temp	Output	Dimming	Lens
1 2 3 4	**8** 80+ **9** 90+	**27** 2700K **30** 3000K **35** 3500K **40** 4000K	**S** Standard **H** High **M** Maximum *Custom: Specify Lumens* (1)	**S** Std. 0-10V 1% **L** Lutron 1% (3) **D** DALI 1% **P** POE (3) **W** Wireless (1)	**S** 25°S pot **F** 40°F lood **D** Diffusion **O** Solite

LINEAR LED

CRI	Color Temperature	Output	Dimming	Lens
8 80+ **9** 90+ **R** RGB & RGBW	**27** 2700K *(90CRI only)* **30** 3000K **35** 3500K **40** 4000K **TW** Tunable White (1)(2) **DW** Dim-to-Warm (1)(2) **GB** RGB **G3** RGBW 3000K **G5** RGBW 3500K	**S** Standard **H** High **M** Maximum *Custom: Specify Lm/Ft* (3) **F** Fixed *(for RGBs)*	**S** Std. 0-10V 1% **O** Dim-to-Off (1)(2) **L** Lutron 1% (3) **D** DALI 1% **P** PoE (3) **2** Wire *(phase-cut)* **T** Step *(10%-70%)* **W** Wireless (3) **X** DMX *(RGBs)*	**DF** Diffusion **D1** Drop 1/2" **BW** Batwing **LW** Louver White **LS** Louver Specular

- [ ] - [ ] - [ ] [ ] - [ ]

FIXTURE

Fixture Length	Fixture Finish
Nominal: **24** **36** **48** **60** **72** **84** **96** *(see Pg 2)* *Custom:* **Cxxx** *(in inches)*	**W** White (std) **B** Black **C** *Custom: Specify RAL#*

MOUNTING

Suspension	Hanging Length	Canopy Type	Canopy Color
CW Cable with White SJ **CB** Cable with Black SJ (3) **ST** Stem no SJ	**48"** (Cable std) **24"** (Stem std) *Custom Length:* *(in inches)*	**R5** 5" Round, Std. **R2** 2" Round* **S5** 5" Square **S2** 2" Square* **(Non Power Feed Locations Only)*	**W** White, Std. **B** Black *Custom Color: Specify R or S + RAL#*

Linear flush lens, direct pendant with open aperture LED downlight compartment(s). Linear portion utilizes high performance LED boards, snap-in lenses and full reflectors. Downlight module(s) utilize a high performance COB component and reflector behind a clear or frosted lens. Adjustable virtual pivot: 0-40°, 355° rotation.

Product Code Example: **PDA6-3D830SSD-L830HSD-DF-C120-W-CW24-R5W**

(1) 90CRI, 2700K-6500K std., others available. Specify CCT range
(2) 0-10V Control, std., others available – Specify (factory to confirm)
(3) Specify - Factory to confirm

STARFIRE LIGHTING, INC.
7 Donna Drive, Wood-Ridge, NJ 07075
starfirelighting.com

P 201.438.9540
F 201.438.9541

All designs and drawings are the property of STARFIRE LIGHTING, INC. We reserve the right to make changes to specifications and approved designs at any time without notice to facilitate manufacturing methods to the extent that such changes do not compromise design integrity. All performance specifications are subject to +/- 10% deviation.

6" LED Linear Direct Pendant with Open Aperture LED Downlight Modules

PDA6

Features

- Starfire's proprietary EvenGlow™ system provides uniform illumination from end-to-end without lamp imaging, bright spots or shadows at any length.
- Fixtures fabricated to any length without custom engineering.
- Exceptional lumen per watt efficiency.
- High efficiency, low cost Tunable White, Dim-to-Warm, and RGB & RGBW options.
- High performance snap-in lenses: flush diffusion, batwing, or drop with illuminated end caps, plus white or specular louver options.
- Combine with welded corner Connectors to form small or large scaled patterns of uniform light.

Mounting

- Round canopies (std), square available. Consult factory for special ceiling conditions.
- Aircraft cable (std), stem optional. Mounting location 0.375" from end of fixture.
- Contact factory for fixture length >96".

Linear LED: Specifications/Photometry - Page 3

VDM Downlight Spec. - Download from Website

Consult factory for RGB/W

Fixture Specifications

- Housing/Trim: Heavy-duty extruded aluminum.
- Finish: White (std), custom available.
- Weight: Approx. 3.8 lbs. per linear foot, plus 1.0 lbs per VDM downlight module.
- UL Listed, (indoor non-condensing)

Electrical

- Power consumption: Per specification based on LED configuration.
- Input Voltage: 120-277V universal driver.
- Ambient operating range: -4 °F to +100 °F.
- Integral electronic drivers.
- Independent linear and downlight circuiting.
- Integral wiring bus between fixture sections.
- Drivers with full dimming range at any output choice.
- Dimming: 0-10V 1% standard, contact factory for options.
- RGB & RGBW Power Supply and DMX Decoder are external.

Options (Consult Factory)

- Occupancy sensor, daylight control module.
- EM battery pack in 4ft segments. Delivers 1000+ total lumen for 90 mins (depending upon configuration). Specify location. (Not for use with RGBs).
- BAA/BABA compliance for some configurations – factory to advise.

LED Strip

High output edge-to-edge, end-to-end illumination

- Choice of lumen output levels: **S**: Standard, **H**: High, **M**: Max. **C**: Custom (between 200 and 1100 Lm/Ft) depending upon configuration.
- **High Output option***: Up to 1800 Lm/Ft, consult factory.
- LED efficiency: Up to 160 Lm/Wt at Maximum output and 180 Lm/Wt. at Standard Power (at 80+ CRI).
- Proprietary in-house, ultra-tight Vf binned LEDs for uniform intensity.
- Color consistency**: Equal or better than 3 SCDM.
- Tunable Range: 2700K-6500K, other ranges available.
- Dim-to-Warm – Warm range down to 1800K.
- L70: 50,000+ hours at Maximum output.
- 5 year limited warranty***

* Consult factory for High Output White channel 1200+ Lm/Ft
** Does not apply to Tunable White
*** See Starfire website for Product Limited Warranty

Fixture Dimensions

Fixture Overall Length

Nominal	Actual
24"	23.5"
36"	34.5"
48"	45.5"
60"	56.5"
72"	72.0"
84"	84.0"
96"	95.0"

Fixture Length Example:

For a nominal 36" length (34.5" exact): enter **36.**

To order an exact 36" length: enter **C36.**

Consult factory for fixture installation dimensions

STARFIRE LIGHTING, INC.
7 Donna Drive, Wood-Ridge, NJ 07075
starfirelighting.com

P 201.438.9540
F 201.438.9541

All designs and drawings are the property of STARFIRE LIGHTING, INC. We reserve the right to make changes to specifications and approved designs at any time without notice to facilitate manufacturing methods to the extent that such changes do not compromise design integrity. All performance specifications are subject to +/- 10% deviation.

White LED Specifications

Diffusor – White LEDs

80 CRI		4000K		3500K		3000K		2700K (90 CRI)	
Output Setting	**Lm/Ft**	**Wt/Ft**	**Lm/Wt**	**Wt/Ft**	**Lm/Wt**	**Wt/Ft**	**Lm/Wt**	**Wt/Ft**	**Lm/Wt**
S Standard	**550**	3.9	141.3	4.0	137.3	4.1	133.3	4.5	123.3
H High	**950**	7.0	135.9	7.2	131.9	7.4	127.9	8.1	116.8
M Maximum	**1020**	7.6	134.9	7.8	130.9	8.0	126.9	8.8	115.6

LV6

Linear Photometrics

Diffuser

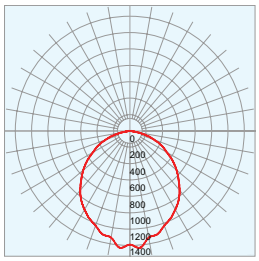

STARFIRE LIGHTING, INC.
7 Donna Drive, Wood-Ridge, NJ 07075
starfirelighting.com

P 201.438.9540
F 201.438.9541

All designs and drawings are the property of STARFIRE LIGHTING, INC. We reserve the right to make changes to specifications and approved designs at any time without notice to facilitate manufacturing methods to the extent that such changes do not compromise design integrity. All performance specifications are subject to +/- 10% deviation.