1" LED Mullion Bracket Mount Fixture

LED

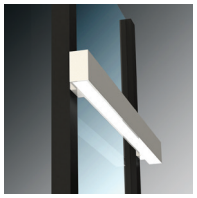

Linear Narrow Profile Direct Mullion Mount Fixture with Flush Lens, External Driver for Wet Locations

MDXW1

Job Name

Fixture Type

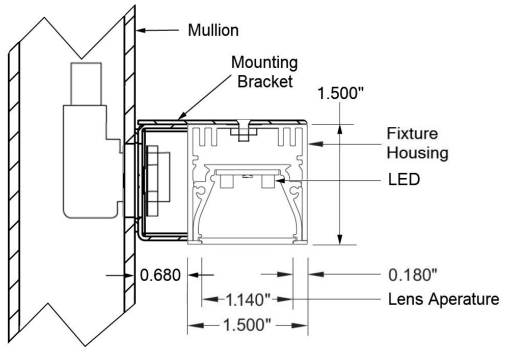

Fixture Profile

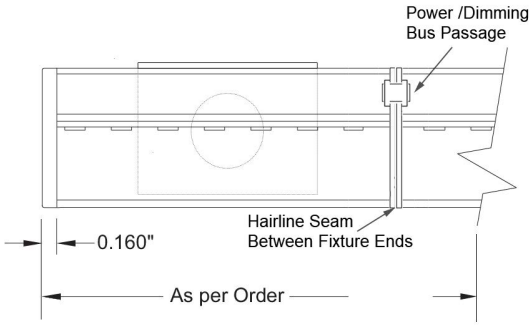

Sectional Side View

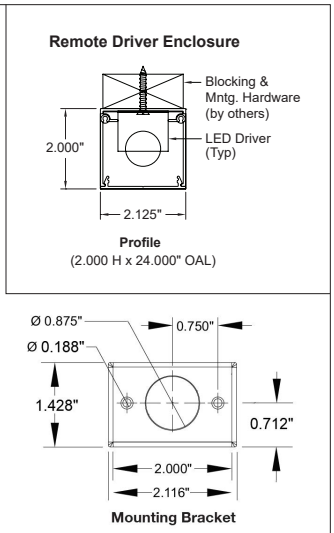

MDXW1-L _____ _____ _____ _____ _____ - _____ - _____ - _____ - _____

CRI	Color Temperature	Output	Dimming	Lens	Length (inches)	Mullion Type	Power Feed	Fix Finish
8 80+ **9** 90+ **R** RGB & RGBW	**27** 2700K *(90CRI only)* **30** 3000K **35** 3500K **40** 4000K **TW** Tunable White [1][2] **DW** Dim-to-Warm [1][2] **GB** RGB **G3** RGBW 3000K **G5** RGBW 3500K	**S** Standard **H** High **M** Maximum *Custom:* *Specify Lm/Ft* [3] **F** Fixed *(RGBs)*	**S** Std. 0-10V 1% **O** Dim-to-Off [1][2] **L** Lutron 1% [3] **D** DALI 1% **P** PoE [3] **2** Wire *(phase-cut)* **T** Step *(10%-70%)* **W** Wireless [3] **X** DMX *(RGBs)*	**DF** Diffusion **AS** Asymmetric **BW** Batwing **LS** Louver Specular	*Nominal:* **24** **30** **48** **60** **96** **120** **144** *(see Table)* *Custom:* **Cxxx** *(in inches)*	**H** Horizontal **Vxxx** Vertical *Specify CTC Spacing in inches*	**L** Left bracket **R** Right bracket	**W** White **B** Black *Custom Color: Specify RAL#*

Product Code Example: **MDXW1-L830HSDF-C80-V24-L-W**

A wet location, ultra-clean line, low profile, narrow aperture, linear mullion mount surface fixture utilizing high performance LED boards and full reflectors. Special sealants and gaskets allow for use in wet locations, (horizontal mount lens facing down only).The MDXW1 integrates with windows for a dramatic illuminated architectural effect.

Features

- Starfire's proprietary EvenGlow™ system provides uniform illumination from end-to-end without lamp imaging, bright spots or shadows.
- High performance flush lens in clear, diffusion, batwing and asymmetric distribution.
- High efficiency, low cost, dynamic Tunable White and Dim-to-Warm options.
- RGB & RGBW full color tuning options.
- Narrow air gap for clean lines and the prevention of thermal issues.
- Sections can be joined to bridge multiple mullions for a continuous line of illumination.
- Joined sections can be powered with single feed reducing installation costs.
- Welded corners are available to create a continuous perimeter fixture.

Fixture Specifications

- Housing/Trim: Heavy-duty extruded aluminum.
- Finish: White (std), custom available.
- Weight: Approx. 1.0 lbs. per linear foot.
- UL Listed, (wet, lens down).
- IP65 design rating.

Electrical

- Power consumption: Per specification based on LED configuration.
- Input Voltage: 120-277V universal driver.
- Ambient operating range: -4 °F to +100 °F.
- Remote electronic drivers.
- Integral wiring bus between fixture sections.
- Drivers with full dimming range at any output choice.
- Dimming: 0-10V 1% standard, contact factory for options.
- RGB & RGBW Dimming: DMX only.
- RGB & RGBW utilize external Decoder and Power Supply capable of driving multiple fixture segments.

White LED Specifications/Photometry: Page 2

Consult factory for RGB

Mounting

- Mullion mount brackets attach directly to hollow mullions.
- Low voltage Class 2 plenum wire connects each section to its remote driver.
- Properly jacketed power feeds terminate on mullion brackets.
- Mullions should be a minimum of 2.0" wide.

Options (Consult factory)

- Occupancy sensor, daylight control module [4].
- EM battery pack in 4ft segments. Delivers 1000+ total lumens for 90 mins (depending upon configuration). Specify location. (Not for use with RGBs).
- BAA/BABA compliance for some configurations - factory will advise.

[1] 90CRI, 2700K-6500K std., others available. Specify CCT range.
[2] 0-10V Control, std., others available – Specify (Factory to confirm).
[3] Specify – Factory to confirm
[4] Sensor must be wet location rated

STARFIRE LIGHTING, INC.
7 Donna Drive, Wood-Ridge, NJ 07075
starfirelighting.com
P 201.438.9540
F 201.438.9541

All designs and drawings are the property of STARFIRE LIGHTING, INC. We reserve the right to make changes to specifications and approved designs at any time without notice to facilitate manufacturing methods to the extent that such changes do not compromise design integrity. All performance specifications are subject to +/- 10% deviation.

MDXW1

White LED Strip

High output edge-to-edge, end-to-end illumination

- Choice of lumen output levels:
  S: Standard, **H:** High, **M:** Maximum
  C: Custom (between 200 and 1100 Lm/Ft) depending upon configuration.
  High output*: Up to 1800 Lm/Ft, consult factory.
- LED Efficiency: Up to 160 Lm/Wt at Max. output and 180 Lm/Wt at Standard power (at 80+ CRI).
- Proprietary in-house, ultra-tight Vf binned LEDs for uniform intensity.
- Color Consistency**: Equal or better than 3 SCDM with chip mixing.
- L70: 50,000+ hours at Maximum output.
- 5 year limited warranty***.

Fixture Dimensions

Nominal	Actual
24"	24.34"
36"	33.62"
48"	48.06"
60"	55.67"
72"	71.81"
84"	83.22"
96"	95.34"

OR - Custom exact length in inches.

Horizontal Mullion: mounting brackets at ends of sections.

Vertical Mullion: mounting brackets at nearest mullion to ends of sections.

Example: Length C80" Mullion V24" Power L

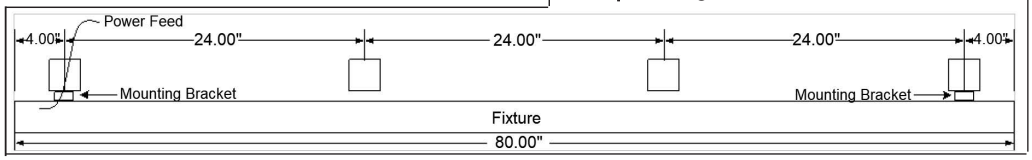

RGB & RGBW LEDs

Maximum Output (Diffusion)

	Lm/Ft	Wt/Ft	Lm/Wt
RGB (all on)	123	9.4	6.0
White	467	6.8	8.4
RGBW (all on)	617	16.2	38.0

Output adjustable with DMX-512 Control

Diffusion

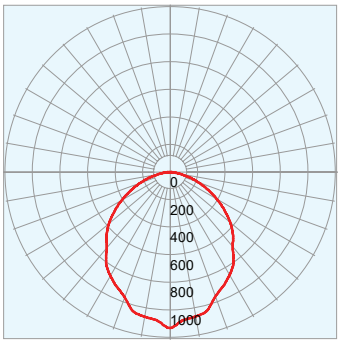

Batwing

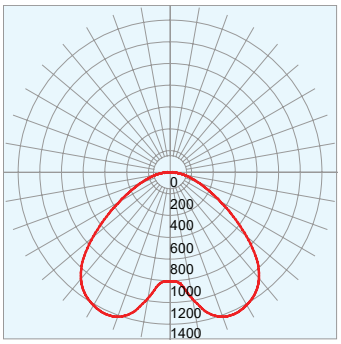

Asymmetric

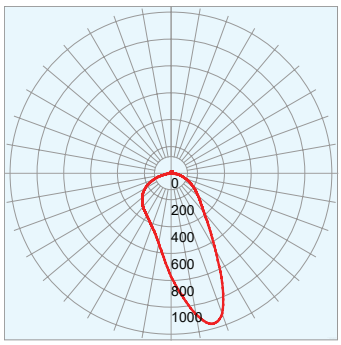

Diffusion – White LEDs

80CRI		4000K		3500K		3000K		2700K	
Output Setting	**Lm/Ft**	**Wt/Ft**	**Lm/Wt**	**Wt/Ft**	**Lm/Wt**	**Wt/Ft**	**Lm/Wt**	**Wt/Ft**	**Lm/Wt**
S Standard	**250**	1.7	147.4	1.7	143.3	1.8	139.3	1.9	129.9
H High	**500**	3.5	144.0	3.6	139.9	3.7	135.9	4.0	125.9
M Maximum	**750**	5.3	140.6	5.5	136.5	5.7	132.5	6.2	121.8

LV6

Batwing – White LEDs

80 CRI		4000K		3500K		3000K		2700K (90 CRI)	
Output Setting	**Lm/Ft**	**Wt/Ft**	**Lm/Wt**	**Wt/Ft**	**Lm/Wt**	**Wt/Ft**	**Lm/Wt**	**Wt/Ft**	**Lm/Wt**
S Standard	**250**	1.7	143.6	1.8	139.7	1.8	135.7	2..0	126.6
H High	**500**	3.6	140.2	3.7	136.3	3.8	132.3	4.1	122.5
M Maximum	**750**	5.5	136.8	5.6	132.9	5.8	128.9	6.3	118.4

LV6

Asymmetric – White LEDs

80 CRI		4000K		3500K		3000K		2700K (90 CRI)	
Output Setting	**Lm/Ft**	**Wt/Ft**	**Lm/Wt**	**Wt/Ft**	**Lm/Wt**	**Wt/Ft**	**Lm/Wt**	**Wt/Ft**	**Lm/Wt**
S Standard	**250**	1.7	147.5	1.7	143.5	1.8	139.5	1.9	130.1
H High	**500**	3.5	144.1	3.6	140.1	3.7	136.1	4.0	126.0
M Maximum	**750**	5.3	140.7	5.5	136.7	5.7	132.6	6.2	121.9

LV6

* Consult factory for High Output White channel 1200+ Lm/Ft
** Does not apply to Tunable White
*** See Starfire website for Product Limited Warranty

IP 65

STARFIRE LIGHTING, INC.
7 Donna Drive, Wood-Ridge, NJ 07075
starfirelighting.com
P 201.438.9540
F 201.438.9541

All designs and drawings are the property of STARFIRE LIGHTING, INC. We reserve the right to make changes to specifications and approved designs at any time without notice to facilitate manufacturing methods to the extent that such changes do not compromise design integrity. All performance specifications are subject to +/- 10% deviation.