1" LED Mullion Bracket Mount Fixture

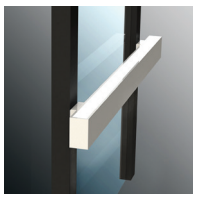

Linear Narrow Profile LED Direct/ Indirect Mullion Mount Fixture – Flush Lens, Internal Driver

MHN1

Job Name

Fixture Type

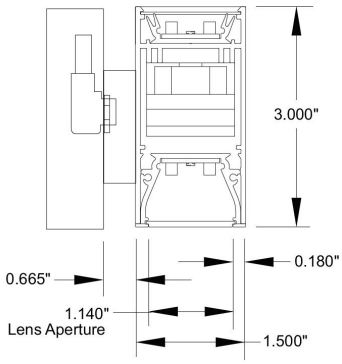

MHN1-L [ ] [ ] [ ] [ ] [ ] - [ ] [ ] [ ] [ ] [ ]

DIRECT

CRI	Color Temperature	Output	Dimming	Lens
8 80+ **9** 90+ **R** RGB & RGBW	**27** 2700K *(90CRI only)* **30** 3000K **35** 3500K **40** 4000K **TW** Tunable White (1)(2) **DW** Dim-to-Warm (1)(2) **GB** RGB **G3** RGBW 3000K **G5** RGBW 3500K	**S** Standard **H** High **M** Maximum *Custom:* *Specify Lm/Ft* (3) **F** Fixed *(RGBs)*	**S** Std. 0-10V 1% **O** Dim-to-Off (1)(2) **L** Lutron 1% (3) **D** DALI 1% **P** PoE (3) **2** Wire *(phase-cut)* **T** Step *(10%-70%)* **W** Wireless (3) **X** DMX *(RGBs)*	**DF** Diffusion **AS** Asymmetric **BW** Batwing **LS** Louver Specular

INDIRECT

CRI	Color Temperature	Output	Dimming	Lens
8 80+ **9** 90+ **R** RGB & RGBW	**27** 2700K *(90CRI only)* **30** 3000K **35** 3500K **40** 4000K **TW** Tunable White (1)(2) **DW** Dim-to-Warm (1)(2) **GB** RGB **G3** RGBW 3000K **G5** RGBW 3500K	**S** Standard **H** High **M** Maximum *Custom:* *Specify Lm/Ft* (3) **F** Fixed *(RGBs)*	**S** Std. 0-10V 1% **O** Dim-to-Off (1)(2) **L** Lutron 1% (3) **D** DALI 1% **P** PoE (3) **2** Wire *(phase-cut)* **T** Step *(10%-70%)* **W** Wireless (3) **X** DMX *(RGBs)*	**CL** Clear (std) **AS** Asymmetric **BW** Batwing

A direct/Indirect, ultra-clean line, low profile, narrow aperture, linear mullion mount surface fixture which seamlessly integrates with windows of any scale for a dramatic illuminated architectural effect. The MHN1 utilizes high performance LED boards, full reflectors, and flush lenses. Extruded aluminum housings contain internal drivers.

Features

- Starfire's proprietary EvenGlow™ system provides uniform illumination from end-to-end without lamp imaging, bright spots or shadows.
- High performance flush lens in clear, diffusion, batwing or asymmetric distribution.
- High efficiency, low cost, dynamic Tunable White and Dim-to-Warm options.
- RGB & RGBW full color tuning options.
- Narrow air gap for clean lines and the prevention of thermal issues with external windows.
- Sections can be joined to bridge multiple mullions for a continuous line of illumination.
- Joined sections can be powered with single feed reducing installation costs.
- Welded corners are available to create a continuous perimeter fixture.

FIXTURE

[ ] - [ ] - [ ] - [ ]

Length (inches)	Mullion Type	Power Feed	Fix Finish
Nominal: **24** **30** **48** **60** **96** **120** **144** *(see Table)* *Custom:* **Cxxx** *(in inches)*	**H** Horizontal **Vxxx** Vertical *Specify CTC Spacing in inches*	**L** Left bracket **R** Right bracket	**W** White **B** Black *Custom Color: Specify RAL#*

Product Code Example: **MHN1-L830SS-DF-830SS-CL-C80-V24-L-W**

White LED Specifications / Photometry: Page 3
(Consult factory for RGB)

(1) 90CRI, 2700K-6500K std., others available. Specify CCT range.
(2) 0-10V Control, std., others available – Specify (Factory to confirm).
(3) Specify – Factory to confirm

STARFIRE LIGHTING, INC.
7 Donna Drive, Wood-Ridge, NJ 07075
starfirelighting.com
P 201.438.9540
F 201.438.9541

All designs and drawings are the property of STARFIRE LIGHTING, INC. We reserve the right to make changes to specifications and approved designs at any time without notice to facilitate manufacturing methods to the extent that such changes do not compromise design integrity. All performance specifications are subject to +/- 10% deviation.

LED Direct/Indirect Mullion Mount Fixture – Flush Lens with Internal Driver

MHN1

Fixture Specifications

- Housing/Trim: Heavy-duty extruded aluminum.
- Finish: White (std), custom available.
- Weight: Approx. 1.4 lbs. per linear foot.
- UL Listed, (indoor non-condensing).

Electrical

- Power consumption: Per specification based on LED configuration.
- Input Voltage: 120-277V universal driver.
- Ambient operating range: -4 °F to +100 °F.
- Integral electronic drivers.
- Integral wiring bus between fixture sections.
- Drivers with full dimming range at any output choice.
- Dimming: 0-10V 1% standard, contact factory for options.
- RGB and RGBW Dimming: DMX only.
- RGB and RGBW utilize external Decoder and Power Supply, capable of driving multiple fixture segments.

Mounting

- Mullion mount brackets attach directly to hollow mullions.
- Power feed conduit connector terminates at the mullion bracket which provides a Class 1 wire entry to the fixture for easy installation.
- Properly jacketed power feeds terminate on mullion brackets.
- Mullions should be a minimum of 1.5" wide.

Options (Consult factory)

- Occupancy sensor, daylight control module.
- EM battery pack in 4ft segments. Delivers 1000+ total lumens for 90 mins (depending upon configuration). Specify location. (Not for use with RGBs)
- BAA/BABA compliance for some configurations – factory will advise.

White LED Strip

High output, edge-to-edge and end-to-end illumination

- Choice of lumen output levels:
  S: Standard, **H:** High, **M:** Maximum
  C: Custom (between 200 and 1100 Lm/Ft) **High Output *:** Up to 1800 Lm/Ft, consult factory
- LED efficiency: Up to 160 Lm/Wt at Maximum output and 180 Lm/Wt at Standard power (at 80+ CRI).
- Proprietary in-house, ultra-tight Vf binned LEDs for uniform intensity.
- Color consistency**: Equal or better than 3 SCDM with chip mixing.
- L70: 50,000+ hours at Maximum output.
- 5 year limited warranty***

RGB & RGBW LEDs

Maximum Output (Diffuser)

	Lm/Ft	Wt/Ft	Lm/Wt
RGB (all on)	123	9.4	6.0
White	467	6.8	8.4
RGBW (all on)	617	16.2	38.0

Output adjustable with DMX-512 Control

Fixture Dimensions

Nominal	Actual
24"	24.34"
36"	33.62"
48"	48.06"
60"	55.67"
72"	71.81"
84"	83.22"
96"	95.34"

OR - Custom exact length in inches.

Horizontal Mullion - mounting bracket at ends of sections.
Vertical Mullions - mounting brackets at nearest mullion to ends of sections.

Example: Length C80" Mullion V24" Power L

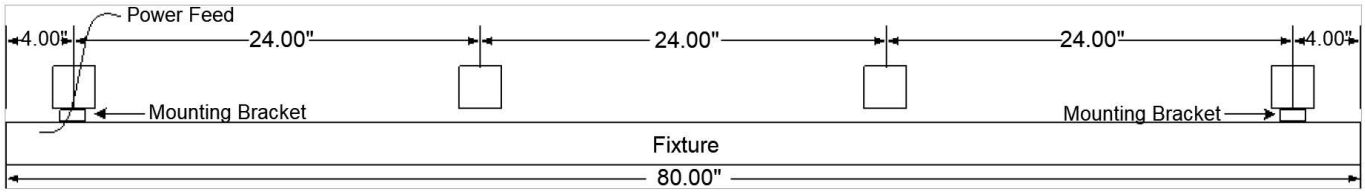

STARFIRE LIGHTING, INC.
7 Donna Drive, Wood-Ridge, NJ 07075
starfirelighting.com

P 201.438.9540
F 201.438.9541

All designs and drawings are the property of STARFIRE LIGHTING, INC. We reserve the right to make changes to specifications and approved designs at any time without notice to facilitate manufacturing methods to the extent that such changes do not compromise design integrity. All performance specifications are subject to +/- 10% deviation.

MHN1

Direct – White LEDs

Diffusion

80 CRI		4000K		3500K		3000K		2700K (90 CRI)	
Output Setting	**Lm/Ft**	**Wt/Ft**	**Lm/Wt**	**Wt/Ft**	**Lm/Wt**	**Wt/Ft**	**Lm/Wt**	**Wt/Ft**	**Lm/Wt**
S Standard	**250**	1.7	147.4	1.7	143.3	1.8	139.3	1.9	129.9
H High	**500**	3.5	144.0	3.6	139.9	3.7	135.9	4.0	125.9
M Maximum	**750**	5.3	140.6	5.5	136.5	5.7	132.5	6.2	121.8

LV6

Direct: Diffusion
Indirect: Clear

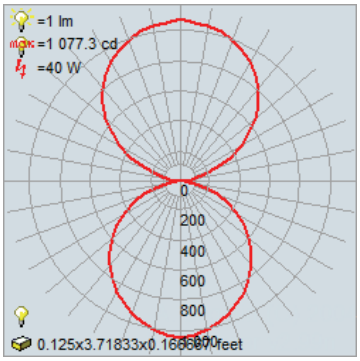

Batwing

80 CRI		4000K		3500K		3000K		2700K (90 CRI)	
Output Setting	**Lm/Ft**	**Wt/Ft**	**Lm/Wt**	**Wt/Ft**	**Lm/Wt**	**Wt/Ft**	**Lm/Wt**	**Wt/Ft**	**Lm/Wt**
S Standard	**250**	1.7	143.6	1.8	139.7	1.8	135.7	2.0	126.6
H High	**500**	3.6	140.2	3.7	136.3	3.8	132.3	4.1	122.5
M Maximum	**750**	5.5	136.8	5.6	132.9	5.8	128.9	6.3	118.4

LV6

Asymmetric

80 CRI		4000K		3500K		3000K		2700K (90 CRI)	
Output Setting	**Lm/Ft**	**Wt/Ft**	**Lm/Wt**	**Wt/Ft**	**Lm/Wt**	**Wt/Ft**	**Lm/Wt**	**Wt/Ft**	**Lm/Wt**
S Standard	**250**	1.7	147.5	1.7	143.5	1.8	139.5	1.9	130.1
H High	**500**	3.5	144.1	3.6	140.1	3.7	136.1	4.0	126.0
M Maximum	**750**	5.3	140.7	5.5	136.7	5.7	132.6	6.2	121.9

LV6

Indirect – White LEDs

Clear

80 CRI		4000K		3500K		3000K		2700K (90 CRI)	
Output	**Lm/Ft**	**Wt/Ft**	**Lm/Wt**	**Wt/Ft**	**Lm/Wt**	**Wt/Ft**	**Lm/Wt**	**Wt/Ft**	**Lm/Wt**
Standard	**250**	1.6	158.5	1.6	154.1	1.7	149.8	1.8	139.8
High	**500**	3.2	155.1	3.3	150.7	3.4	146.4	3.7	135.7
Maximum	**750**	4.9	151.7	5.1	147.3	5.2	143.0	5.7	131.7

LV6

Direct: Diffusion
Indirect: Batwing

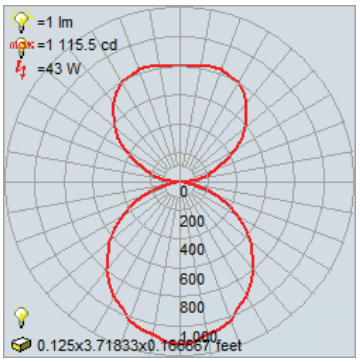

Batwing

80 CRI		4000K		3500K		3000K		2700K (90 CRI)	
Output	**Lm/Ft**	**Wt/Ft**	**Lm/Wt**	**Wt/Ft**	**Lm/Wt**	**Wt/Ft**	**Lm/Wt**	**Wt/Ft**	**Lm/Wt**
Standard	**250**	1.8	138.0	1.9	134.3	1.9	130.5	2.1	121.7
High	**500**	3.7	134.6	3.8	130.9	3.9	127.1	4.3	117.6
Maximum	**750**	5.7	131.2	5.9	127.4	6.1	123.7	6.6	113.5

LV6

* Consult factory for High Output White channel 1200+ Lm/Ft
** Does not apply to Tunable White
*** See Starfire website for Product Limited Warranty

STARFIRE LIGHTING, INC.
7 Donna Drive, Wood-Ridge, NJ 07075
starfirelighting.com

P 201.438.9540
F 201.438.9541

All designs and drawings are the property of STARFIRE LIGHTING, INC. We reserve the right to make changes to specifications and approved designs at any time without notice to facilitate manufacturing methods to the extent that such changes do not compromise design integrity. All performance specifications are subject to +/- 10% deviation.