2" LED Curve Pendant Direct



LED Curve – Direct Pendant Mount with Flush Snap-in Lens

CPD2

Job Name

Fixture Type

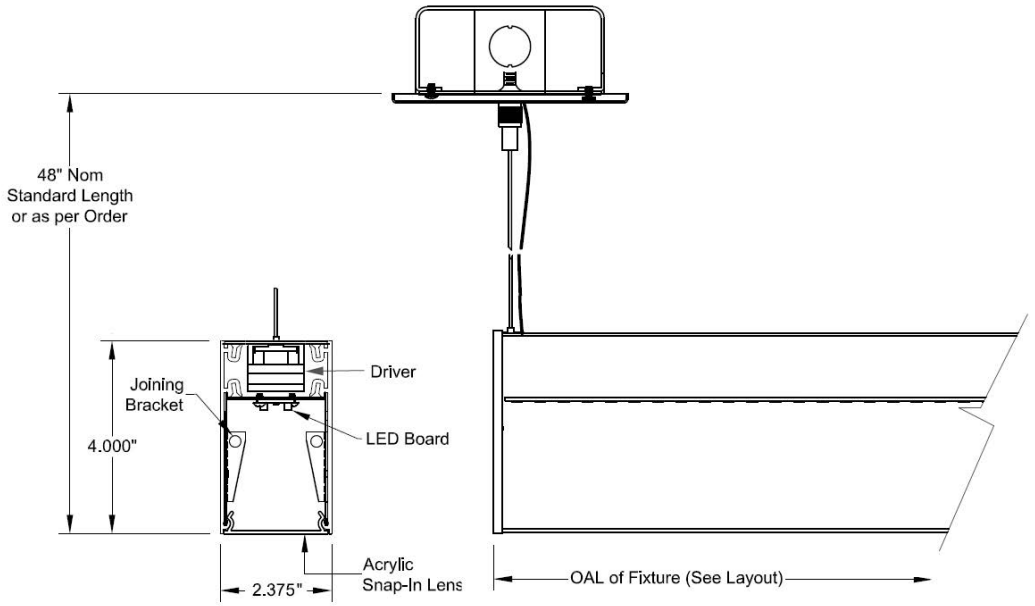

Profile **Sectional Side View**

Standard Arcs

Available in all Radii including Full Circle

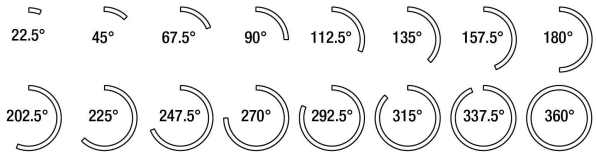

Standard Radius

Measured to Center Line of Fixture

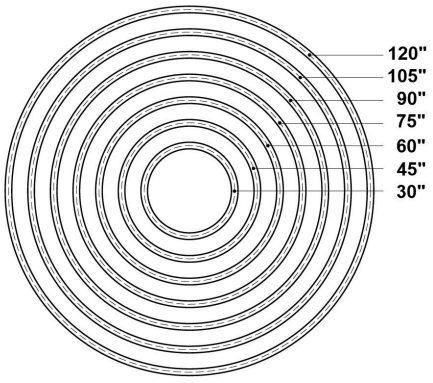

STARFIRE LIGHTING, INC.
7 Donna Drive, Wood-Ridge, NJ
07075 starfirelighting.com

P 201.438.9540
F 201.438.9541

All designs and drawings are the property of STARFIRE LIGHTING, INC. We reserve the right to make changes to specifications and approved designs at any time without notice to facilitate manufacturing methods to the extent that such changes do not compromise design integrity. All performance specifications are subject to +/- 10% deviation.

LED Direct Curve Pendant - Flush Snap-In Lens

Curve Pendant Segment - Order Guide

CPD2-L [ ] [ ] [ ] [ ] - [ ] - [ ] - [ ] - [ ] - [ ] [ ] [ ] [ ]

LED

CRI	Color Temp	Output	Dimming
8 80+ **9** 90+ **R** RGB & RGBW	**27** 2700K *(90CRI only)* **30** 3000K **35** 3500K **40** 4000K **TW** Tunable White (1)(2) **DW** Dim-to-Warm (1)(2) **GB** RGB **G2** RGBW 2700K **G3** RGBW 3000K **G4** RGBW 4000K	**S** Standard **H** High **M** Maximum *Custom:* *Specify Lm/Ft* (3) **F** *Fixed for RGB & RGBW*	**S** Std. 0-10V 1% **O** Dim-to-Off (1)(2) **L** Lutron 1% (3) **D** DALI 1% **P** PoE (3) **2** Wire *(phase-cut)* **T** Step *(10%-70%)* **W** Wireless (3) **X** DMX *(RGBs)*

FIXTURE

Radius (inches)	Arc (°)	Segment	Finish
30 **45** **60** **75** **90** **105** **120** *Custom:* *(8" & Up)*	**22.5** **45.0** **67.5** **90.0** **112.5** **135.0** **157.5** **180.0** **202.5** **225.0** **247.5** **270.0** **292.5** **315.0** **337.5** **360.0** *Custom:* **Cxxx**	**B** Beginning **M** Middle **E** End **S** Stand alone	**W** White Std **B** Black **C** Custom RAL #

MOUNTING

Suspension	Hanging Length	Canopy Type	Canopy Color
CW Cable with White SJ **CB** Cable with Black SJ (3) **ST** Stem no SJ	**48"** (Cable std) **24"** (Stem std) *Custom Length:* *(in inches)*	**R5** 5" Round, Std. **R2** 2" Round * **S5** 5" Square **S2** 2" Square * * *(Non Power Feed Locations Only)*	**W** White, Std. **B** Black *Custom Color:* *Specify R or S* *+ RAL#*

Product Code Example: **CPD2-L830HS-30-45-B-W-CW24-R5W**

Linear Pendant Segment Order Guide (if needed)

PD2-CL [ ] [ ] [ ] [ ] - [ ] - [ ] - [ ] - [ ] [ ] [ ] [ ]

LED

CRI	Color Temp	Output	Dimming
8 80+ **9** 90+ **R** RGB & RGBW	**27** 2700K *(90CRI only)* **30** 3000K **35** 3500K **40** 4000K **TW** Tunable White (1)(2) **DW** Dim-to-Warm (1)(2) **GB** RGB **G2** RGBW 2700K **G3** RGBW 3000K **G4** RGBW 4000K	**S** Standard **H** High **M** Maximum *Custom:* *Specify Lm/Ft* (3) **F** *Fixed for RGB & RGBW*	**S** Std. 0-10V 1% **O** Dim-to-Off (1)(2) **L** Lutron 1% (3) **D** DALI 1% **P** PoE (3) **2** Wire *(phase-cut)* **T** Step *(10%-70%)* **W** Wireless (3) **X** DMX *(RGBs)*

FIXTURE

Length(")	Segment	Finish
Nominal: **24** **36** **48** **60** **72** **84** **96** *(see Page 3)* *Custom:* **Cxxx** *(in inches)*	**B** Beginning **M** Middle **E** End **S** Stand alone	**W** White Std **B** Black **C** Custom RAL #

MOUNTING

Suspension	Hanging Length	Canopy Type	Canopy Color
CW Cable with White SJ **CB** Cable with Black SJ (3) **ST** Stem no SJ	**48"** (Cable std) **24"** (Stem std) *Custom Length:* *(in inches)*	**R5** 5" Round, Std. **R2** 2" Round * **S5** 5" Square **S2** 2" Square * * *(Non Power Feed Locations Only)*	**W** White, Std. **B** Black *Custom Color:* *Specify R or S* *+ RAL#*

Product Code Example: **PD2-CL830HS-C120-M-W-CW24-R5W**

(1) 90CRI, 2700K-6500K std., others available. Specify CCT range
(2) 0-10V Control, std., others available – Specify (Factory to confirm)
(3) Specify - Factory to confirm

STARFIRE LIGHTING, INC.
7 Donna Drive, Wood-Ridge, NJ
07075 starfirelighting.com
P 201.438.9540
F 201.438.9541

All designs and drawings are the property of STARFIRE LIGHTING, INC. We reserve the right to make changes to specifications and approved designs at any time without notice to facilitate manufacturing methods to the extent that such changes do not compromise design integrity. All performance specifications are subject to +/- 10% deviation.

CPD2

LED Direct Curve Pendants easily join with our linear direct pendants to create virtually any illuminated shape or pattern. Curve pendants utilize high performance LED boards and flush snap-in diffusion lenses.

Features

- Starfire's proprietary EvenGlow™ system provides uniform illumination from end-to-end without lamp imaging, bright spots or shadows.
- Seven standard radii from 30"–120".
- Custom radii from 8" and up.
- Standard and custom arc increments from 22.5°–360° allow for the creation of virtually any curved shape.
- Custom arcs at any angle.
- Seamlessly joins to Starfire 2" linear pendants and X, T, & L shaped surface connectors with matching lens illumination and dimming.
- Exceptional lumen per watt efficiency.
- High efficiency, low cost, Tunable White, Dim-to-Warm and RGB & RGBW options.
- High performance acrylic flush snap-in lens.

Fixture Specifications

- Housing/Trim: Heavy-duty extruded aluminum.
- Finish: White (std), custom available.
- Weight: Approx. 3.5 lbs. per linear foot.
- Consult factory for RGB specifications.
- UL Listed, (indoor non-condensing) & CCEA Approved.

Electrical

- Power consumption: Per specification based on LED Configuration.
- Input Voltage: 120-277V universal driver.
- Ambient operating range: -4 °F to +100 °F.
- Integral electronic drivers (may be external depending upon radius and driver type. (Consult factory).
- Integral wiring bus between fixture sections.
- Drivers with full dimming range at any output choice.
- 1% Dimming: 0-10V standard (included), consult factory for other options.

Mounting

- Round canopies (std.). square available. Contact factory for special ceiling conditions.
- Cable mounting location 0.375" from end of fixture.
- Consult factory for multi-segment fixtures.

Options (Consult factory)

- Occupancy sensor, daylight control module.
- HVAC, fire sprinkler, surveillance or public address system integration.
- EM pack in 4ft segments. Delivers 800+ total lumens for 90 mins. May be remote in tight radius curves, consult factory.
- Wireless controls.
- BAA/BABA compliance for some configurations – factory will advise.

LED Specifications: See Page 4

Configuration Examples: See Page 4

STARFIRE LIGHTING, INC.
7 Donna Drive, Wood-Ridge, NJ
07075 starfirelighting.com

P 201.438.9540
F 201.438.9541

All designs and drawings are the property of STARFIRE LIGHTING, INC. We reserve the right to make changes to specifications and approved designs at any time without notice to facilitate manufacturing methods to the extent that such changes do not compromise design integrity. All performance specifications are subject to +/- 10% deviation.

Multi-Segment Examples

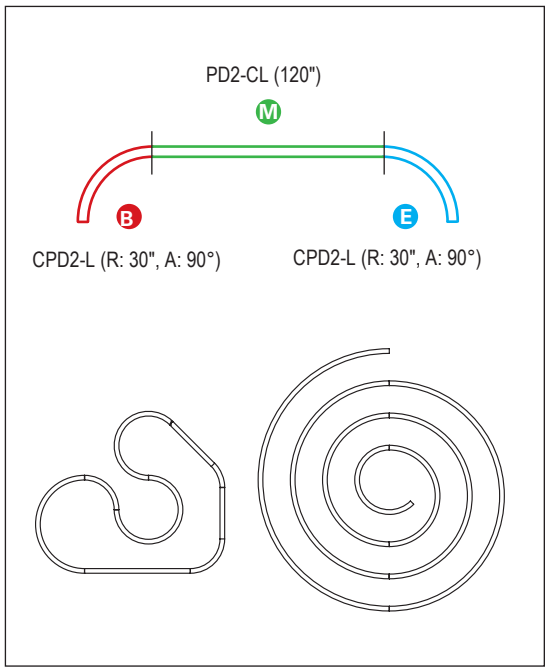

Segment Key

B Beginning - Starts with End Cap.
M Middle - No End Cap.
E End - Ends with End Cap.
S Stand Alone - Ends Cap both Ends.

BEGINNING to END is always clockwise on a segment.

Straight Segment Overall Length

Nominal	Actual
24"	23.5"
36"	34.5"
48"	45.5"
60"	56.5"
72"	72"
84"	84"
96"	95"

Consult factory for fixture installation dimensions

White LED Strip

High output edge-to-edge and end-to-end illumination

- Choice of lumen output levels: **S:** Standard, **H:** High, **M:** Maximum **C:** Custom (between 200 and 900 Lm/Ft).
- **High Output*** option: Up to 1800 Lm/Ft, consult factory.
- LED Efficiency: Up to 160 Lm/Wt at Maximum output and 180 Lm/Wt at Standard power (at 80+ CRI).
- Proprietary in-house, ultra-tight Vf binned LEDs for uniform intensity.
- 2700K, 3000K, 3500K, 4000K and Tunable White: 2700K-6500K.
- CRI: 80+ or 90+
- Color Consistency**: Equal or better than 3 SCDM with chip mixing.
- L70: 50,000+ hours at Maximum output.
- 5 year limited warranty***

RGB & RGBW LEDs

Maximum Output (Diffuser)

	Lm/Ft	Wt/Ft	Lm/Wt
RGB (all on)	**151**	9.4	16.0
White	**467**	6.8	68.4
RGBW (all on)	**617**	16.2	38.0

Output adjustable with DMX-512 Control

Curve Segment Efficacy

80 CRI		4000		3500		3000		2700 (90 CRI)	
Settings	Lm/ft	Wt/Ft	Lm/Wt	Wt/Ft	Lm/Wt	Wt/Ft	Lm/Wt	Wt/Ft	Lm/Wt
S	400	4.1	98.5	4.2	95.7	4.3	93.0	4.7	85.9
H	700	7.4	94.4	7.6	91.7	7.9	88.9	8.6	81.0
M	800	8.6	93.1	8.9	90.3	9.1	87.5	10.1	79.4

LV6

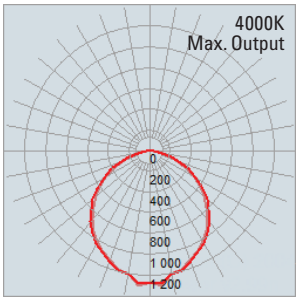

* Consult factory for High Output White channel 1200+ Lm/Ft
** Does not apply to Tunable White
*** See Starfire website for Product Limited Warranty

starfire
STARFIRE LIGHTING, INC.
7 Donna Drive, Wood-Ridge, NJ
07075 starfirelighting.com
P 201.438.9540
F 201.438.9541

All designs and drawings are the property of STARFIRE LIGHTING, INC. We reserve the right to make changes to specifications and approved designs at any time without notice to facilitate manufacturing methods to the extent that such changes do not compromise design integrity. All performance specifications are subject to +/- 10% deviation.