2" LED Recessed Curved Slot for MRI Room Applications

LED



LED Curved Slot – Low Profile recessed with Flush Snap-in Lens for MRI Room Applications

CVLM2

Job Name	
Fixture Type	

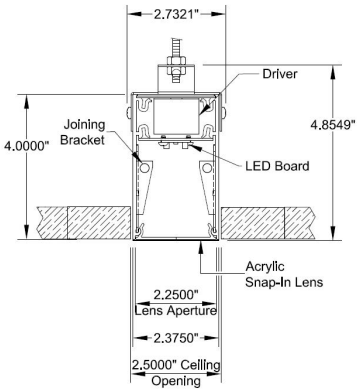

Flangeless Profile

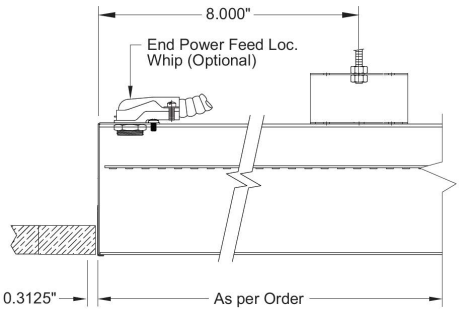

Flangeless Sectional Side

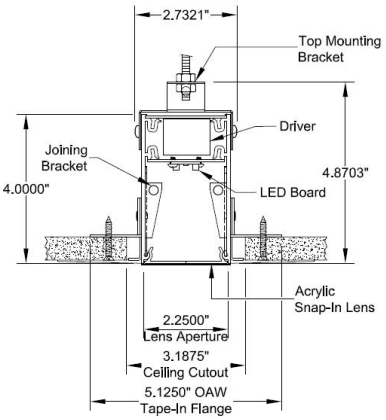

Plaster Flange Above Ceiling*

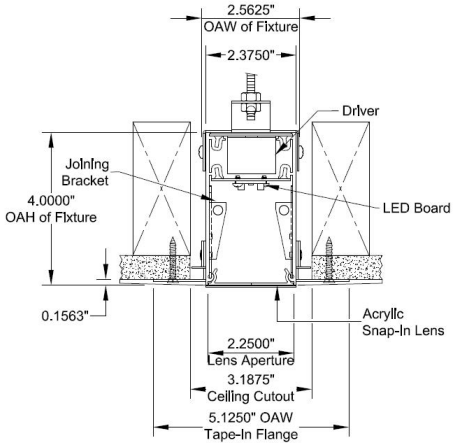

Plaster Flange Below Ceiling

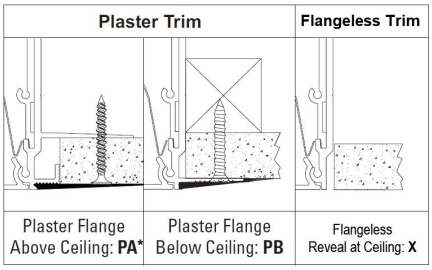

*** Fixture must be installed before ceiling**

Standard Arcs

Available in all Radii, including Full Circle

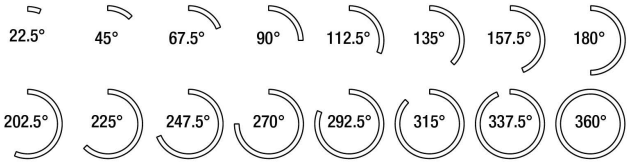

Standard Radius

Measured to Center Line of Fixture

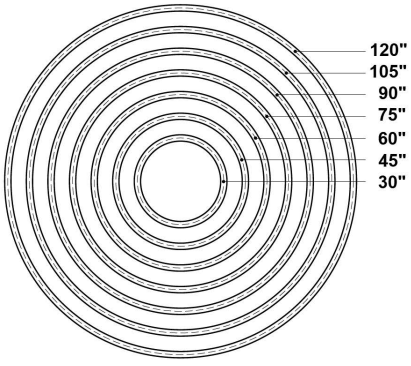

STARFIRE LIGHTING, INC.
7 Donna Drive, Wood-Ridge, NJ 07075
starfirelighting.com

P 201.438.9540
F 201.438.9541

All designs and drawings are the property of STARFIRE LIGHTING, INC. We reserve the right to make changes to specifications and approved designs at any time without notice to facilitate manufacturing methods to the extent that such changes do not compromise design integrity. All performance specifications are subject to +/- 10% deviation.

LED Recessed Curved Slot – Flush Snap-in Lens for MRI Room Applications

Curve Slot Segment Order Guide

CVLM2-L [ ] [ ] [ ] [ ] - [ ] - [ ] - [ ] - [ ] - [ ] - [ ]

CRI	Color Temperature	Output	Dimming	Radius (")	Arc (°)	Ceiling Trim	Segment	Finish	Whip
8 80+ **9** 90+	**27** 2700K *(90CRI only)* **30** 3000K **35** 3500K **40** 4000K **TW** Tunable White (1)(2) **DW** Dim-to-Warm (1)(2)	**S** Standard **H** High **M** Maximum *Custom: Specify Lm/Ft* (2)	**S** Std. 0-10V 1% **O** Dim-to-Off (2) **L** Lutron 1% (3) **D** DALI 1% **P** PoE (3) **W** Wireless (3)	**30** **45** **60** **75** **90** **105** **120** *Custom: (8" & Up)*	**22.5** **45.0** **67.5** **90.0** **112.5** **135.0** **157.5** **180.0** **202.5** **225.0** **247.5** **270.0** **292.5** **315.0** **337.5** **360.0** *Custom:* **Cxxx**	**PA** Plaster Flange Above Ceiling * **PB** Plaster Flange Below Ceiling **X** Flangeless	**B** Beginning **M** Middle **E** End **S** Stand alone	**W** White Std **B** Black **C** Custom RAL #	**N** No Whip **W** Standard Whip **C** Chicago Whip

Product Code Example: **CVLM2-L830HS-C65-90-X-B-W-N**

Mating Linear Slot Segment Order Guide (if needed)

VLM2-CL [ ] [ ] [ ] [ ] - [ ] - [ ] - [ ] - [ ] - [ ]

CRI	Color Temperature	Output	Dimming	Length(")	Ceiling Trim	Segment	Finish	Whip
8 80+ **9** 90+	**27** 2700K *(90CRI only)* **30** 3000K **35** 3500K **40** 4000K **TW** Tunable White (1)(2) **DW** Dim-to-Warm (1) (2)	**S** Standard **H** High **M** Maximum *Custom: Specify Lm/Ft* (1)	**S** Std. 0-10V 1% **O** Dim-to-Off (1)(2) **L** Lutron 1% (3) **D** DALI 1% **P** PoE (3) **W** Wireless (3)	*Nominal:* **24** **36** **48** **60** **72** **84** **96** *(see Page 2)* *Custom:* **Cxxx** *(in inches)*	**PA** Plaster Flange Above Ceiling * **PB** Plaster Flange Below Ceiling **X** Flangeless	**B** Beginning **M** Middle **E** End **S** Stand alone	**W** White Std **B** Black **C** Custom RAL #	**N** No Whip **W** Standard Whip **C** Chicago Whip

*** Fixture must be installed before ceiling**

Product Code Example: **VLM2-CL830HS-96-X-M-W-N**

CVLM2

Specifically designed for MRI room applications, this Recessed LED Curved Slot is made of non-ferrous material for a zero magnetic footprint. All active electronics are located remotely, removing the source of emitted radiation from the room. Dimming is Constant Current Reduction with no PWM. A low-voltage, 2-wire, shielded cable connects fixture sections to the remote driver enclosure. MRI grade EMI filters are at the cable entrance to the room (multiple filters per section for Tunable White and High Output options). These fixtures easily join with our linear recessed slots to create virtually any illuminated shape or pattern. Curved slots utilize high performance LED boards and flush snap-in diffusion lenses.

Features

- Starfire's proprietary EvenGlow™ system provides uniform illumination from end-to-end without lamp imaging, bright spots or shadows.
- Seven standard radii from 30"–120".
- Custom radii from 8" and up.
- Standard and custom arc increments from 22.5°–360° allow for the creation of virtually any curved shape.
- Seamlessly joins to Starfire 2" linear slots and X, T, & L shaped slot connectors with matching lens illumination and dimming.
- Exceptional lumen per watt efficiency.
- High efficiency, low cost, Tunable White and Dim-to-Warm options.
- High performance acrylic flush snap-in lens.

Fixture Specifications

- Housing/Trim: Heavy-duty extruded aluminum.
- Finish: White (std), custom available.
- Weight: Approx. 3.2 lbs. per linear foot.
- UL Listed, (indoor non-condensing) & CCEA Approved.

Electrical

- Power consumption: Per specification based on LED Configuration.
- Input Voltage: 120-277V universal driver.
- Ambient operating range: -4 °F to +100 °F.
- Remote electronic drivers to comply with MRI EMI restrictions.
- Fixture section connected to remote driver via low voltage cable. Cable enters MRI room via MRI grade EMI filter.
- Integral wiring bus between fixture sections.
- Drivers with full dimming range at any output choice.
- 1% Dimming: 0-10V standard (included), consult factory for other options.

LED Specifications: See Page 3

Configuration Examples: See Page 3

Mounting

- Universal mounting brackets provided. Contact factory for alternate mounting.
- Easy Access wiring compartment – all connections can be made without disassembling the fixture.
- Consult factory for multi-segment fixtures.

Options (Consult factory)

- 6 ft. whip may be factory installed.
- Occupancy sensor, daylight control module.
- HVAC, fire sprinkler, surveillance or public address system integration.
- EM pack in 4ft segments. Delivers 800+ total lumens for 90 mins. May be remote in tight radius curves, consult factory.
- Wireless controls.
- BAA/BABA compliance for some configurations – factory will advise.

(1) 90 CRI, 2700K-6500K std, others available. Specify CCT range.
(2) 0-10V Control std, others available - Specify (Factory to confirm).
(3) Specify – Factory to confirm.

STARFIRE LIGHTING, INC.
7 Donna Drive, Wood-Ridge, NJ 07075
starfirelighting.com
P 201.438.9540
F 201.438.9541

All designs and drawings are the property of STARFIRE LIGHTING, INC. We reserve the right to make changes to specifications and approved designs at any time without notice to facilitate manufacturing methods to the extent that such changes do not compromise design integrity. All performance specifications are subject to +/- 10% deviation.

Multi-Segment Examples

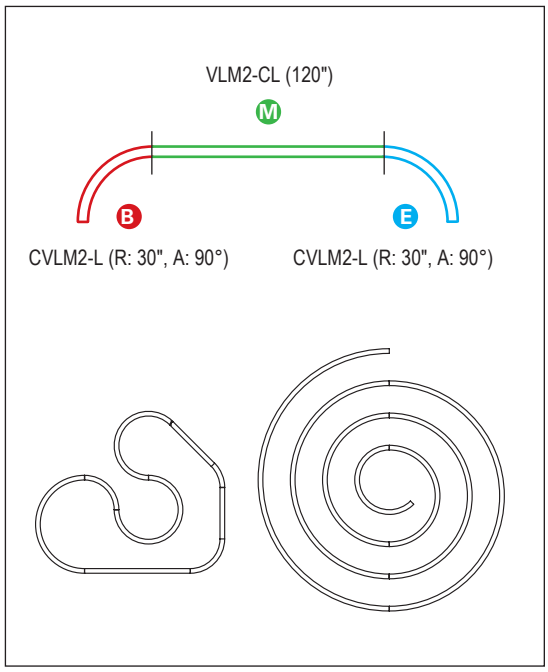

Segment Key

B Beginning - Starts with End Cap.
M Middle - No End Cap.
E End - Ends with End Cap.
S Stand Alone - Ends Cap both Ends.

BEGINNING to END is always clockwise on a segment.

Straight Segment Overall Length

Nominal	Actual
24"	23.5"
36"	34.5"
48"	45.5"
60"	56.5"
72"	72"
84"	84"
96"	95"

Consult factory for fixture installation dimensions

White LED Strip

High output edge-to-edge and end-to-end illumination

- Choice of lumen output levels: Standard, High, Maximum and Custom (between 200 and 900 Lm/Ft).
- LED Efficiency: Up to 160 Lm/Wt at Maximum output and 180 Lm/Wt at Standard power (at 80+ CRI).
- Proprietary in-house, ultra-tight Vf binned LEDs for uniform intensity.
- 2700K, 3000K, 3500K, 4000K and Tunable White: 2700K-6500K.
- CRI: 80+ or 90+
- Color Consistency: Equal or better than 3 SCDM with chip mixing.
- L70: 50,000+ hours at Maximum output.
- 5 year limited warranty*

Curve Segment Efficacy

80 CRI		4000		3500		3000		2700 (90 CRI)	
Settings	Lm/ft	Wt/Ft	Lm/Wt	Wt/Ft	Lm/Wt	Wt/Ft	Lm/Wt	Wt/Ft	Lm/Wt
S	400	4.1	98.5	4.2	95.7	4.3	93.0	4.7	85.9
H	700	7.4	94.4	7.6	91.7	7.9	88.9	8.6	81.0
M	800	8.6	93.1	8.9	90.3	9.1	87.5	10.1	79.4

LV6

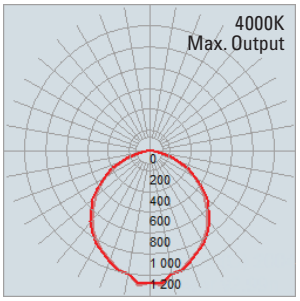

* See Starfire website for Product Limited Warranty

STARFIRE LIGHTING, INC.
7 Donna Drive, Wood-Ridge, NJ 07075
starfirelighting.com
P 201.438.9540
F 201.438.9541

All designs and drawings are the property of STARFIRE LIGHTING, INC. We reserve the right to make changes to specifications and approved designs at any time without notice to facilitate manufacturing methods to the extent that such changes do not compromise design integrity. All performance specifications are subject to +/- 10% deviation.