2",4"& 6" VersaLux LED Slots

Series VR2 / VR4 / VR6



Regressed Lens

Grid Ceiling Installation Instructions

OVERVIEW: VR2, VR4 and VR6 slots are intended to be installed in a suspended grid ceiling via threaded rod or hanger wire affixed to building structure. Supporting fixtures on the ceiling grid may violate local building codes. It is not recommended by Starfire.

Preparation & Labeling

Install power feeds and hanging devices at designated locations first.
See approved submittal drawing for locations.

WARNING:

- Do not drill through side-wall of fixture for any reason.
- Do not disassemble unless specifically advised to do so in installation instructions.
- Power and dimming wiring must be installed according to local electrical codes.

Step 1: Unpacking & Fixture Labeling

Locate power feed section and note section labels. Refer to fixture labels for assembly order. Refer submittal drawing for layout. Sections are cut and wired for installation in designated positions only.

Lenses may be pre-installed or packed with fixtures and labeled per fixture.
NOTE: Lenses are precision cut to compensate for expansion and eliminate light leak. Install lenses in their designated fixtures/sections only.

Dimensions (Figure 2)

Fixture	Trim	Dim A	Dim B	Dim C	Dim D
VR2-LO	**X9** (9/16" Grid)	3.000"	5.000"	6.625"	4.375"
VR2-LO	**X1** (15/16" Grid)	3.375"	5.000"	6.625"	4.375"
VR4-LO	**X9** (9/16" Grid)	4.000"	5.000"	6.625"	5.375"
VR4-LO	**X1** (15/16" Grid)	4.375"	5.000"	6.625"	5.375"
VR6	**X9** (9/16" Grid)	6.000"	5.000"	6.625"	5.383"
VR6	**X1** (15/16" Grid)	6.375"	5.000"	6.625"	5.382"

Step 2: Mounting Preparation (Figure 3)

Threaded Rod – Thread Top Stop Nut (A) at the appropriate height before attaching to Mounting Bracket. For low clearance conditions, detach top section of mounting bracket by removing Screws (B). Next, install two Threaded Rods, one in each Hole (C) on both sides.

Hanger Wire – Bend the Hanger Wire Tab (D) on the Mounting Bracket up to a right angle. Adjust Hanger Wire to the desired height before attaching to Mounting Bracket.

Step 3: Fixture Installation (Figure 3)

It is generally recommended to begin with the power feed section. Lift fixture section into position. Threaded Rod – Install Bottom Stop Nut under bracket. Adjust height and level, then tighten both threaded rod lock nuts together to ensure fixture is securely mounted. Hanger Wire – Pass hanger wire through hole in hanger wire tab. Adjust height and level. Wrap hanger wire around itself to ensure fixture is securely mounted.

With mounting method completed, make certain that adjustable grid brackets are lightly resting on top of grid member and Tabs (E) overlap the grid member. To adjust bracket, loosen Screws (F) and slide up or down until fixture is flush to bottom of ceiling grid member, then tighten screws.

NOTE: Mounting Bracket position on fixture is field-adjustable. Do not move more than a few inches or fixture may become unstable.

If fixture has multiple sections, install according to submittal drawing. Ensure matching labels are at the junction of the sections.

Note: VR4 is shown. VR2 & VR6 vary slightly, instructions are common.

Figure 1

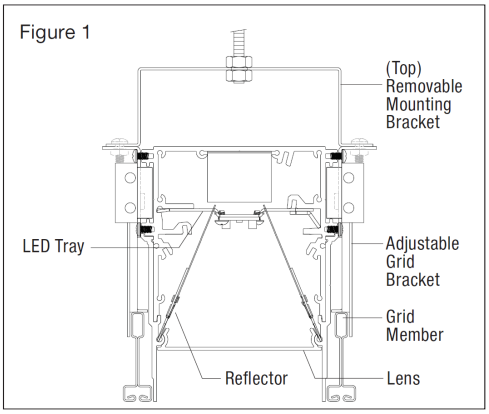

Figure 2

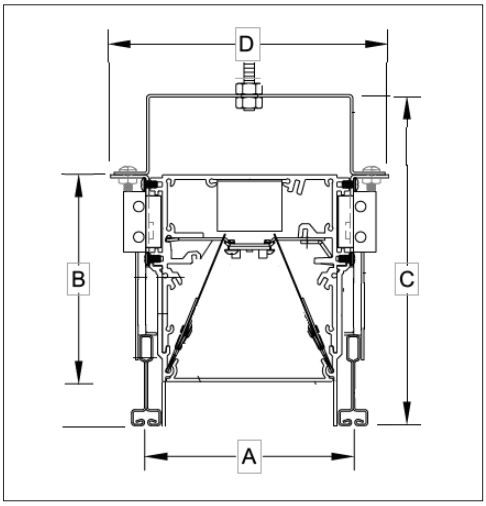

Figure 3

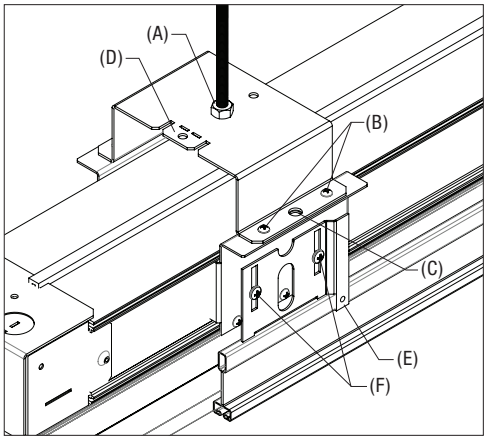

Step 3: Fixture Hanging (continued)

(Figure 4)
Remove the Jack Screws (G) from the Receiver Brackets (H). Raise the next section into position. Plug the Power Bus Connectors (I) together then slide the Splines (J) into the Channels (K). Make sure the bus wires retreat into the wiring compartment and are not pinched between the sections. Install the Jack Screws through the Spline Bracket into the Receiver Bracket. Tighten until section seem is firmly closed. DO NOT over tighten.

Repeat for any additional sections and perform final leveling and grid adjustments.

Step 4: Lens Installation (Figure 5)

After all sections are hung, if lenses were not pre-installed, start with either end of the fixture run and locate the lens labeled to match that section. Insert Lens into the aperture by placing about 1/8" of the lens under the End Cap Lip (L). Press lens firmly into the aperture snapping it in place along the length of the fixture. For adjoining sections, place the next lens adjacent to the previous lens and snap in place.

NOTE: Lenses are precision cut slightly short of the overall length of the run. This allows for heat expansion. Slight gaps between lenses will close when the fixture is on. For single section fixtures, it may be necessary to bow the lens slightly (M) to insert opposite end under the End Cap Lip. Finish by snapping the center into place.

Step 5: Wiring (Figure 6)

Fixture with Whip: It is not necessary to remove the Wiring Compartment Access Cover (N). Make all connections at the end of the whip. If whip is not in correct orientation, remove the access cover by removing the Screw (O), then rotate the cover and reinstall whip ensuring the Tab (P) inserts into channel. Reinstall screw to the end of the fixture.

Fixture without Whip: To field-wire, remove wiring compartment access cover and remove K/O(s) as required. Attach flex conduit via an approved connector and allow for about 6" of wire to extend past the connector. After making connections according to the table below, carefully tuck the excess wire into the wiring compartment and reinstall the cover as described above.

Wiring Color Codes

Function	Standard 0-10V Dimming	Lutron 3 Wire Line Dimming	Lutron Eco Dimming
Switched Line (120-277V)	Black	Black	Black
Neutral	White	White	White
Ground	Green	Green	Green
0-10V (+)	Purple		
0-10V (-)	Grey		
Dimmed Line		Orange	
E1			Purple/White
E2			Purple

Figure 4

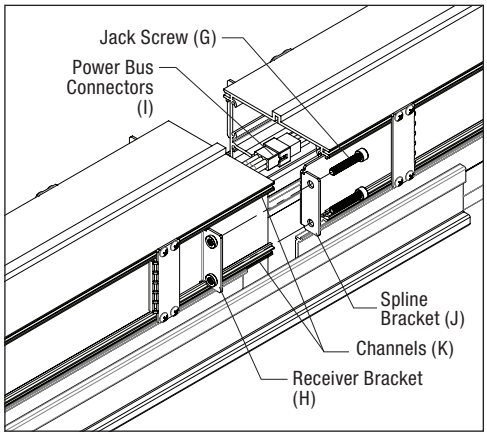

Figure 5

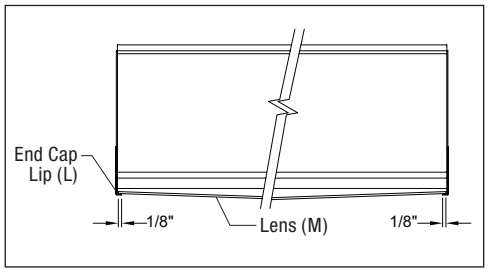

Figure 6

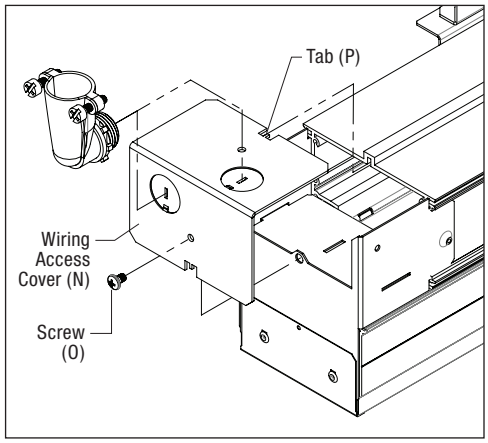

Figure 7

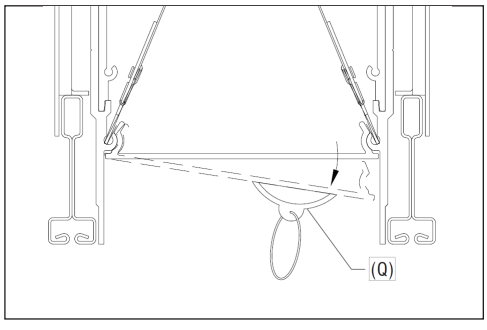

Service and Repair

DO NOT attempt to repair fixtures without first contacting the factory. Improper repair actions will void the warranty and can result in damage to the fixture components. Driver and LED components are custom configured at the factory. Generic replacements CANNOT be used – If parts need replacing, obtain from factory; properly configured for each fixture.

If directed to make a repair, turn off power to the fixture before disassembly. **CAUTION** – Some fixtures have multiple circuits running through the wiring compartment including un-switched circuits. BE SURE ALL POWER IS OFF.

Fixture Disassembly

Lens Removal (Figure 7)

If lenses are installed, remove by pressing the provided Suction Cup to Lens and pull down (Q). This works best at the center of the lens section. For single section fixtures, it may be necessary to bow the Lens slightly to clear both end cap lips.

Reflector Removal (Figure 8 & 9)

Tray Reflectors must be removed before LED Tray. Turn Cams (R) with a flat blade screwdriver, then tilt reflector inward until free (Fig. 9).

LED Tray Removal (Figure 10 & 11)

Generally, LED Trays do not have to be separated from the fixture to access the driver, they can loosely hang from the fixture temporarily. With Reflectors removed, lower LED tray by turning Latches (S) with a flat blade screwdriver and tilt tray outward.

If necessary to remove LED Trays, use a small pointed tool to press tab on the Push-in Connector (T – Fig 11) until wire is disconnected. Do not pull wires without fully pressing the tab as the connectors can be torn from the board.

Driver Replacement (as needed)

To disconnect wires, use a small pointed tool to press tab on the Push-in Connector until wire is free. Note wire color and position for proper reinstallation. Unscrew driver to remove. Reinstall only factory configured exact replacement. Reinstall wires in their original position by pushing into connector.

Fixture Reassembly (Figure 12)

When reinstalling wires to LED Trays, ensure polarity is the same as when removed. Reversing wires can damage the electronics.

LED Tray

LED Tray, tilt into the upper cavity until edge is firmly in Channel (U). Turn Latches (S) sufficiently to secure the LED Tray is in place. **CAUTION** – Do not over tighten Latches or you may distort the extrusion and prevent the lens from snapping firmly into place.

Reflectors

Insert Tab located at the top edge of Reflector into the slots in the LED Tray (Fig. 13 – X). Tilt bottom edge of reflector toward the outside of the fixture and fully turn cams to secure hold against the housing. If reflectors do not fit easily, LED Tray or Reflector Tabs are not positioned correctly. **CAUTION** – Do not over tighten cams or you may distort the extrusion and prevent the lens from snapping firmly into place.

Lenses (see Step 4 on page 2)

Figure 8

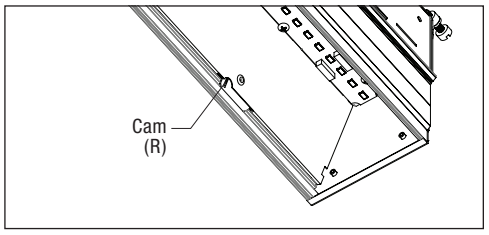

Figure 9

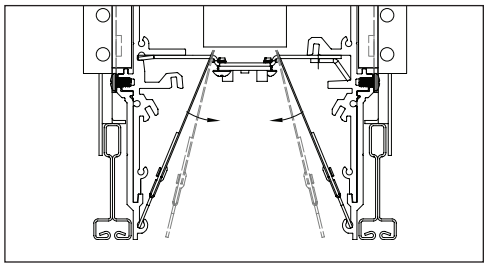

Figure 10

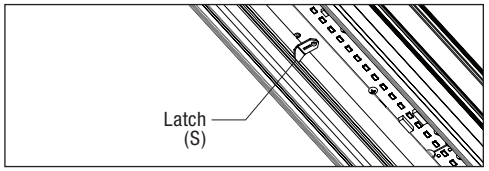

Figure 11

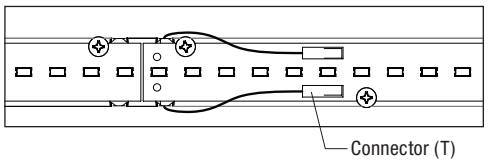

Figure 12

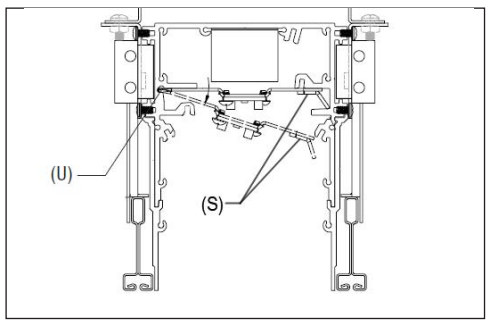

Figure 13

