2",4& 6" VersaLux LED Slot

Series VL2 / VL4 / VL6



Flush Lens

Plaster Flange Below (PFB) Installation Instructions

OVERVIEW: VL2, VL4 and VL6 linear LED recessed slots with Plaster Flange Below Ceiling (PFB) option, are to be installed into ceiling or wall after sheetrock has been installed. The fixture must be affixed to building structure via structural blocking behind the sheetrock surface. The plaster flange is utilized to hold the sheetrock to the fixture preventing the spackle from cracking. It is not intended to support the sheetrock which must be supported by independent structural blocking (by others) - Figure 1.

Preparation

Install power and dimming feeds, and structural blocking (by others) at designated locations. **NOTE:** Refer to local building codes and electrical layout for proper power and control circuiting.

WARNING:

- Do not drill through side-wall of fixture for any reason.
- Do not disassemble unless specifically directed to do so in installation instructions.
- Fixture must be structurally attached via blocking affixed to building structure. Fixture is not to be considered part of the ceiling or wall support system.
- Mounting and wiring must conform to local codes.

Step 1: Unpacking & Fixture Labeling

Unpack fixtures. Locate power feed sections and note section labels. Refer to fixture labels for assembly order. Refer submittal drawing for layout. Sections are cut and wired for installation in designated positions only.

Lenses are generally pre-installed. If not, they will be bundled with fixtures and labeled per fixture section. **NOTE:** Lenses are precision cut to compensate for expansion and eliminate light leaks. Install lenses in their designated fixtures/ sections only.

Spacer Bars must remain in place until entire fixture is securely installed for accurate aperture spacing and lens fit (Refer to Figure 7 on next page).

Dimensions (Fig 2)

Fixture	Trim	Dim A	Dim B	Dim C	Dim D	Dim E
VL2-LO	PFB	2.375"	4.000"	3.0313"	3.1875"	5.125"
VL4-LO	PFB	3.375"	4.000"	4.0313"	4.1875"	6.125"
VL6	PFB	5.250"	4.000"	6.0313"	6.1875"	7.125"

Opening in drywall should conform to Dimension D.

Step 2: Mounting Preparation (Figures 2 & 3)

Begin with the Power Feed Section (Fig 3). Make connections as described below before mounting section.

Wiring (Figure 4)

Fixture with Whip: Make all connections at the end of Whip. If Whip is not in correct orientation, remove the Wiring Compartment Access Cover (F) by removing the Screw (G), then rotate the cover and reinstall whip ensuring the Tab (H) inserts into channel. Reinstall screw to the end of the fixture.

Fixture without Whip: To field-wire, remove wiring compartment access cover and remove K/O(s) as required. Attach flex conduit via an approved connector and allow for about 6" of wire to extend past the connector. After making connections according to the table below, carefully tuck the excess wire into the wiring compartment and reinstall cover as described above.

Note: VL4 is shown. VL2 & VL6 vary slightly — instructions are common

Figure 1

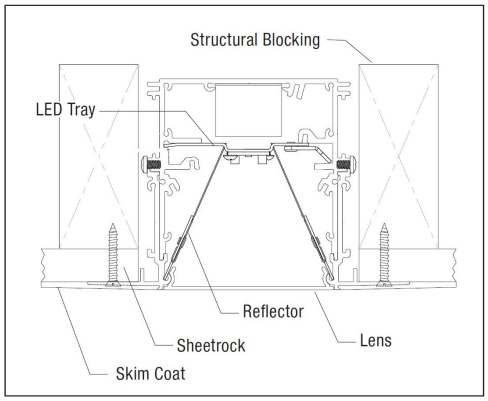

Figure 2

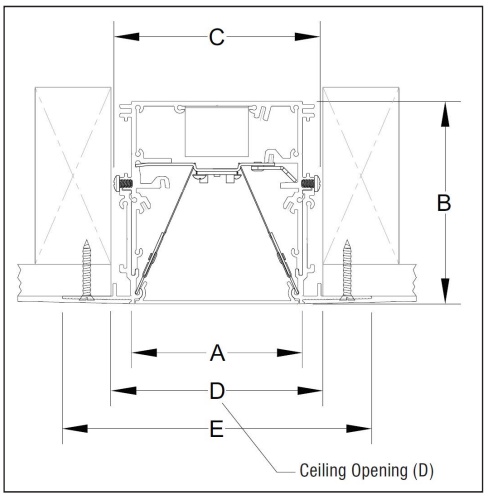

Figure 3

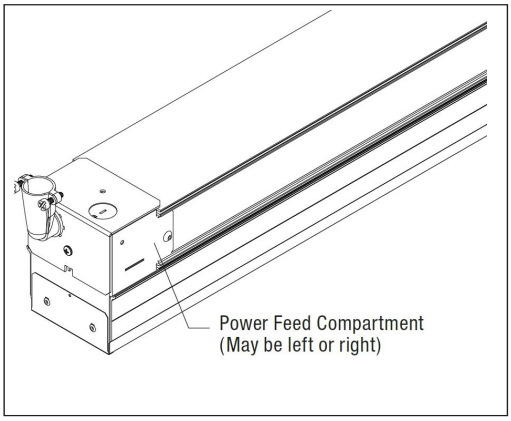

Wiring Color Codes

Function	Standard 0-10V Dimming	Lutron 3 Wire Line Dimming	Lutron Eco Dimming	DALI
Switched Line (120-277V)	Black	Black	Black	Black
Neutral	White	White	White	White
Ground	Green	Green	Green	Green
Intensity 0-10V (+)	Purple			
Intensity 0-10V (-)	Grey			
CCT (TW option only) 0-10V (+)	Purple/White			
CCT (TW option only) 0-10V (-)	Brown			
Dimmed Line		Orange		
E1			Purple/White	
E2			Purple	
D1				Purple/White
D2				Purple

Step 3: Fixture Mounting (Figures 5, 6 & 7)

Raise and support power feed section into position in the prepared opening. Drive Drywall Screws (I) through slotted holes provided in flange (Figure 5). Ensure screws are long enough to extend through sheetrock into the blocking material and thread properly engages blocking. Drive screws in the center of slot, straight into blocking making sure not to distort fixture opening. Screws must be installed in all provided holes to fully support the fixture.

If fixture has multiple sections, locate the adjoining section (Figure 6). Adjoining sections are labeled at junctions with matching labels.

Remove Jack Screw (J) from the Spacer Bar at end of the mating fixture section. Raise the next section into position, plug the Power Bus connectors together and tuck wires back into their respective sections ensuring they are not pinched between sections. Slide fixture sections together. Note the trim on one section overlaps the housing on the other section to help with alignment.

Insert the Jack Screw into holes on the Spacer Brackets and tighten so that the fixture sections are pulled together with no visible seam.

Next, screw the new fixture section into the blocking through the flanges as described above. Repeat this process for all remaining sections.

NOTE: Check fixtures for proper function before Finishing.

Step 4: Finishing (Figures 5, 6 & 7)

When all sections are installed, remove all Spacer Bars (Figure 7 – K).

If lenses were shipped intalled, remove them from fixture sections before applying plaster and paint (See Lens Removal, Figure 9, next page).

Note: Lenses are precision cut for each section. Ensure that they are reinstalled in proper section.

Apply spackle only to plaster flange area (Refer to Fig 5). DO NOT get spackle inside fixture or beyond the Grouting Lip (Figure 5 – I) as it may prevent the lens from engaging fixture and may cause damage to the fixture.

Sand and paint as required. If any sanding dust entered the fixture, use compressed air to expel it. Do not use water, or solvents, or touch the LED boards.

Figure 4

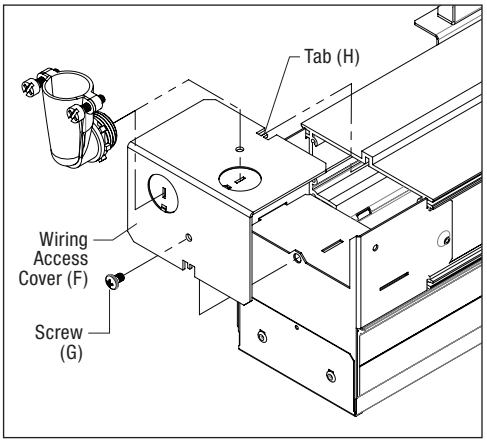

Figure 5

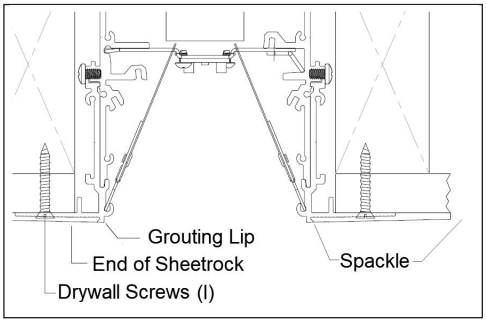

Figure 6

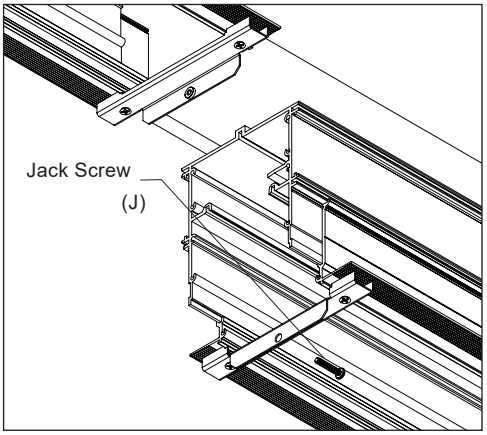

Figure 7

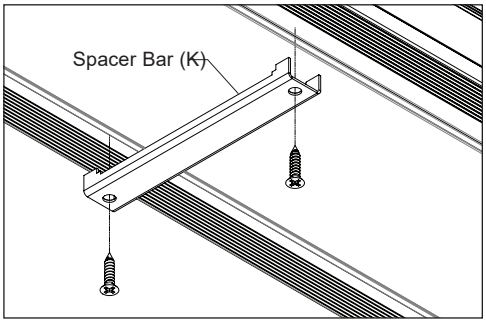

Lens Installation (Figure 8)
Start with either end of the fixture run and locate the lens labeled to match that section. Insert Lens into the aperture by placing about 1/8" of the lens under the End Cap Lip (L). Press lens firmly into the aperture snapping it in place along the length of the fixture. For adjoining sections, place the next lens adjacent to the previous lens and snap in place.

NOTE: Lenses are precision cut slightly short of the overall length of the run. This allows for heat expansion. Slight gaps between lenses will close when the fixture is on.

Service and Repair

DO NOT attempt to repair fixtures without first contacting the factory. Improper repair actions will void warranty and may result in damage to the fixture components. Driver and LED components are custom configured at the factory. Generic replacements CANNOT be used – If parts need replacing, obtain from factory; properly configured for each fixture.

CAUTION – Some fixtures have multiple circuits running through the wiring compartment including un-switched circuits. BE SURE ALL POWER IS OFF.

Fixture Disassembly

Fixtures are serviceable from below – follow steps:

Lens Removal (Figure 9)
Remove Lenses by pressing the provided Suction Cup (M) to the Lens and carefully pulling down. This works best at the center of the lens section. For single section fixtures, it may be necessary to bow the lens slightly to clear both end cap lips. Lenses are precision for each fixture section. Ensure lenses are reinstalled in the section they were removed from (refer to fixture labels).

Reflector Removal (Figures 10 & 11)
Turn Cams (N) with a small flat blade screwdriver, then tilt Reflector inward until free (Figure 11).

LED Tray Removal (Figures 12 & 13)
Generally, LED Trays do not have to be separated from fixture to access the driver, they can loosely hang from the fixture temporarily. If removal is needed, with Reflectors removed, lower LED Tray by turning Latches (O) with a small flat blade screwdriver and tilt tray outward.

If necessary to completely remove LED Trays, use a small pointed tool to press Tabs (Figure 13 - P) on the Push-in Connector until wire is free. Note wire color and position for proper reinstallation. Do not pull wires without fully pressing the tab as the connectors can be torn from the board.

Driver Replacement

Unscrew driver to remove. Reinstall only factory configured exact replacement. Reinstall wires in their original position by pushing into connector.

Figure 8

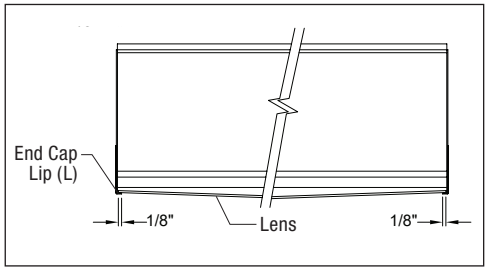

Figure 9

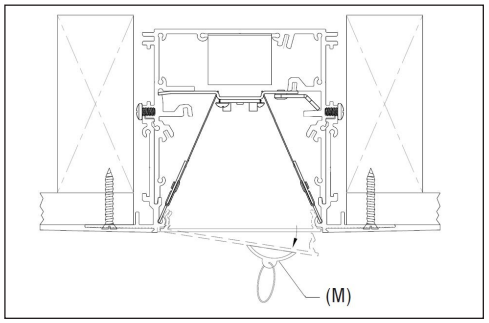

Figure 10

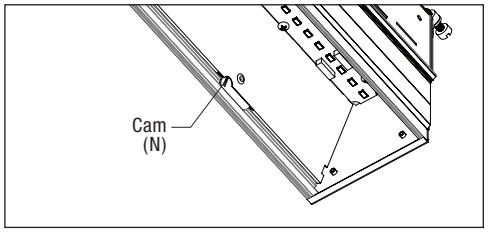

Figure 11

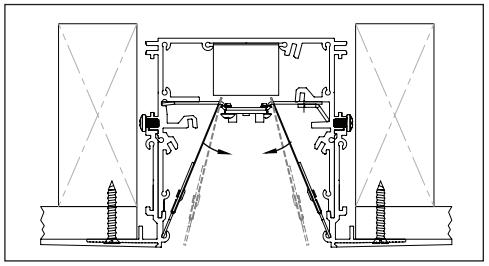

Figure 12

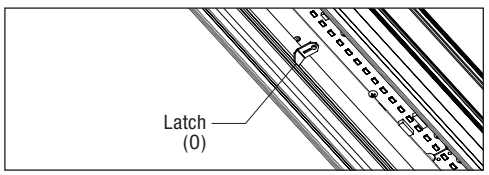

Fixture Reassembly

When reinstalling wires to LED Trays, ensure polarity is the same as when removed. Reversing wires can damage the electronics.

LED Trays (Figure 14)
Tilt the edge of the LED Trays into the cavity until edge is firmly in Channel (Q). Turn Latches (O) sufficiently to secure the LED Tray is in place. **CAUTION** – Do not over tighten Latches or you may distort the extrusion and prevent the lens from snapping firmly into place.

Reflectors (Figure 15)
Insert Tab located at the top edge of Reflector into the Slots (R) in the LED Tray. Tilt bottom edge of reflector toward the outside of the fixture and fully turn Cams (S) to secure hold against the housing. If reflectors do not fit easily, LED Tray or Reflector Tabs are not positioned correctly. **CAUTION** – Do not over tighten cams or you may distort the extrusion and prevent the lens from snapping firmly into place.

Lenses (Refer to Figure 8)
Press lens firmly into the aperture snapping it in place along the length of the fixture. If Lens is at end of fixture, place about 1/8" of the lens under the End Cap Lip (L) before snapping in.

Figure 13

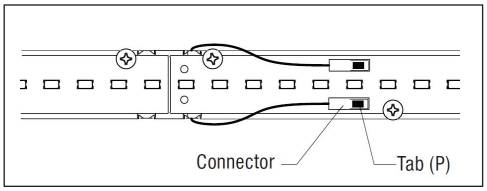

Figure 14

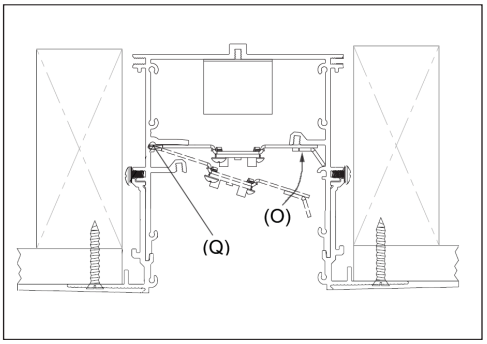

Figure 15

