2",4"& 6" VersaLux LED Slots

Series VL2 / VL4 / VL6



Flush Lens

Plaster Flange Above (PFA) Installation Instructions

OVERVIEW: VL2, VL4 and VL6 linear LED recessed slots with Plaster Flange Above (PFA) option, are to be installed into ceiling before sheetrock has been installed. The fixture must be affixed to building structure via threaded rod. The plaster flange is utilized to hold the sheetrock to the fixture preventing the spackle (plaster) from cracking. It is not intended to support the sheetrock which must be supported by independent structural blocking (by others) - Figure 1.

Preparation & Labeling

Install power feeds and hanging devices at designated locations first.
See approved submittal drawing for locations.

WARNING:

- Do not drill through side-wall of fixture for any reason.
- Do not disassemble unless specifically directed to do so in installation instructions.
- Fixture must be structurally attached via blocking affixed to the actual facility structure. Fixture is not to be considered part of the ceiling support system.
- Power and dimming wiring must be installed according to local electrical codes.

Step 1: Unpacking & Fixture Labeling

Unpack fixtures, locate power feed section and note section labels. Refer to fixture labels for assembly order. Refer to submittal drawing for layout. Sections are cut and wired for installation in designated positions only.

Lenses may be pre-installed or packed with fixtures and labeled per fixture.
NOTE: Lenses are precision cut to compensate for expansion and eliminate light leak. Install lenses in their designated fixtures/sections only.

Spacer Bars must remain in place until fixture is securely installed for accurate aperture spacing and lens fit (Refer to Figure 7 on next page).

Dimensions (Figure 2)

Fixture	Trim	Dim A	Dim B	Dim C	Dim D	Dim E	Dim F
VL2-LO	PFA	2.375"	4.000"	5.5625"	3.825"	3.250"	5.0625"
VL4-LO	PFA	3.375"	4.000"	5.5625"	4.825"	4.250"	6.0625"
VL6	PFA	5.250"	4.000"	5.5625"	6.825"	6.250"	7.1250"

Step 2: Mounting Preparation (Figure 3)

Install power feeds and threaded rods in their appropriate locations.

Threaded Rod - Thread Top Stop Nut (A) onto the threaded rod at the appropriate height before attaching to the Mounting Bracket (B).

Step 3: Fixture Installation (Figure 3)

It is generally recommended to begin with the power feed section. If cables permit, connections can be made before raising the fixture (see Wiring on next page) otherwise, lift fixture section into position, with Threaded Rod through the Mounting Bracket hole.

Install Bottom Stop Nut (C) under the Mounting Bracket. Adjust height and level, then tighten both threaded rod lock nuts together to ensure fixture is securely mounted. .

NOTE: Mounting Bracket position on the fixture is field-adjustable. Do not move more than a few inches or fixture may become unstable.

Note: VL4 is shown. VL2 & VL6 vary slightly — instructions are common

Figure 1

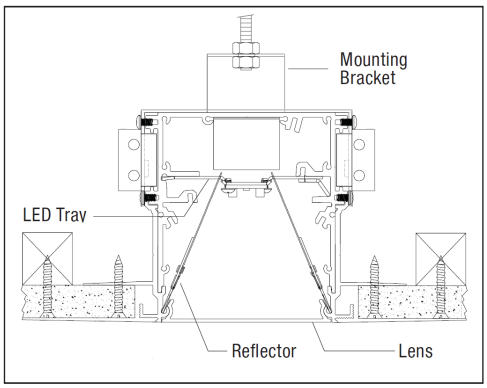

Figure 2

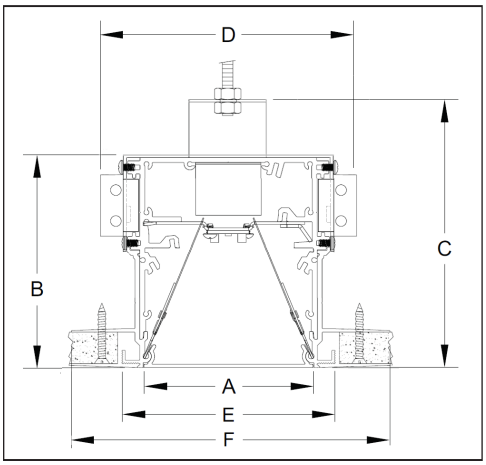

Figure 3

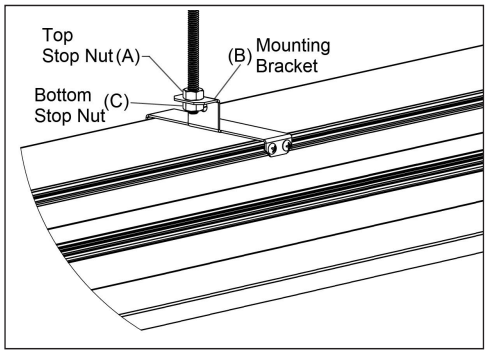

Step 3: Fixture Installation (continued)

Additional Sections (Figure 4)
If fixture has multiple sections, install according to submittal drawing. Ensure matching labels are at the junction of the sections.

Remove the Jack Screws (D) from the Receiver Brackets (E). Raise the next section into position and fit on threaded rods. Plug the Power Bus Connectors (F) together then slide the Splines (G) into the Channels (H). Make sure the bus wires retreat into the wiring compartment and are not pinched between the sections. Install the Jack Screws through the Spline Bracket into the Receiver Bracket. Tighten until section seem is firmly closed. DO NOT over tighten.

Repeat for any additional sections and perform final leveling.

Step 4: Wiring (Figure 5)

Fixture with Whip: It is not necessary to remove the Wiring Compartment Access Cover (I), unless the whip is not in the correct orientation. To change orientation, remove the access cover by removing the Screw (J), then rotate the cover and reinstall whip ensuring the Tab (K) inserts into channel. Reinstall screw to the end of the fixture. Make all connections at the end of the whip.

Fixture without Whip: To field-wire, remove wiring compartment access cover and remove K/O(s) as required. Attach flex conduit via an approved connector and allow for about 6" of wire to extend past the connector. After making connections according to the table below, carefully tuck the excess wire into the wiring compartment and reinstall the cover as described above.

NOTE: Check fixtures for proper function before Finishing.

Wiring Color Codes

Function	Standard 0-10V Dimming	Lutron 3 Wire Line Dimming	Lutron Eco Dimming	DALI
Switched Line (120-277V)	Black	Black	Black	Black
Neutral	White	White	White	White
Ground	Green	Green	Green	Green
Intensity 0-10V (+)	Purple			
Intensity 0-10V (-)	Grey			
CCT (TW option only) 0-10V (+)	Purple/White			
CCT (TW option only) 0-10V (-)	Brown			
Dimmed Line		Orange		
E1			Purple/White	
E2			Purple	
D1				Purple/White
D2				Purple

Step 5: Finishing (Figures 6 & 7)

Cut sheetrock to the stop at the edge of fixture below plaster flange (Figure 6). Firmly attach sheetrock to its own blocking so it is self-supporting. Drive self tapping screws through sheetrock into flange. Ensure neither sheetrock nor screws distort (stretch, compress or twist) the fixture, or the lenses will not properly attach.

When all sections are completed, remove shipping Spacer Bars (L) (Figure 7).

If fixtures have been shipped with lenses pre-installed, they must be removed before applying plaster and paint. Lenses are precision cut to each section, ensure they are re-installed in proper section.

Figure 4

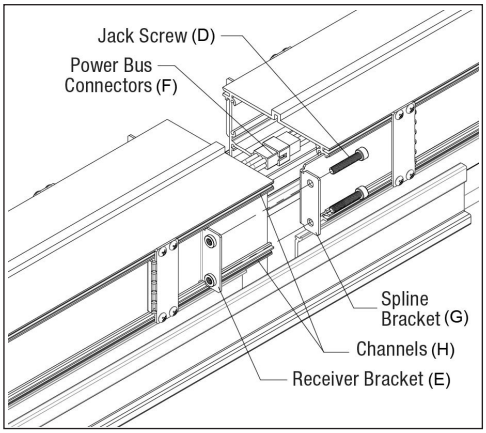

Figure 5

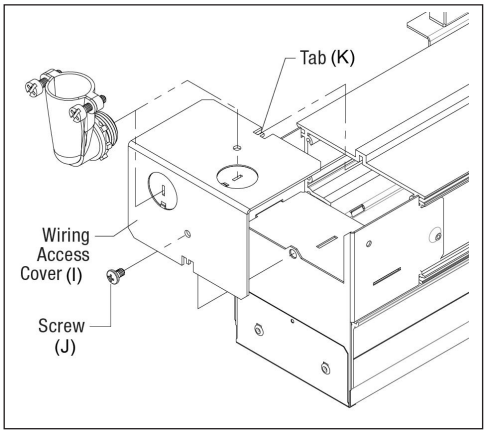

Figure 6

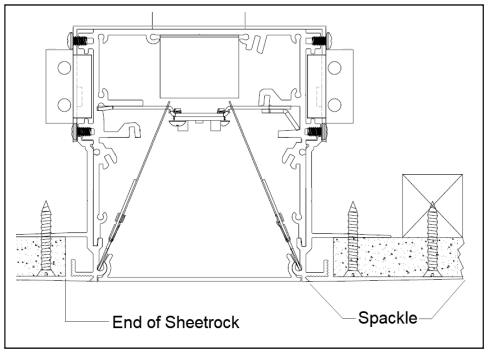

Figure 7

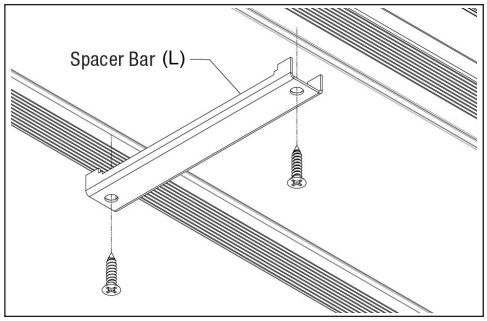

Step 5: Finishing (continued)

Lens Removal (Figure 8)

Remove Lenses by pressing the provided Suction Cup (M) to the Lens and carefully pulling down. This works best at the center of the lens section. For single section fixtures, it may be necessary to bow the lens slightly to clear both end cap lips.

Plaster / Paint (Figure 6)
Apply plaster only to plaster flange area (Figure 6). Avoid getting spackle inside the housing as it will prevent the lens from snapping securely into place.
Avoid getting any sanding dust inside the fixture as it will impact the light output. If dust is in the optical cavity, use compressed air to expel it. Do not touch or use and liquids on the LEDs.
Complete painting of sheetrock at edge of fixture. Avoid getting any paint inside the fixture as it will impact the light output.

Lens Installation (Figure 9)
Start with either end of the fixture run and locate the lens labeled to match that section. Insert Lens into the aperture by placing about 1/8" of the lens under the End Cap Lip (N). Press lens firmly into the aperture snapping it in place along the length of the fixture. For adjoining sections, place the next lens adjacent to the previous lens and snap in place.

NOTE: Lenses are precision cut slightly short of the overall length of the run. This allows for heat expansion. Slight gaps between lenses will close when the fixture is on. For single section fixtures, it may be necessary to bow the lens slightly in the center to insert opposite end under the End Cap Lip. Finish by snapping the center into place.

Service and Repair

DO NOT attempt to repair fixtures without first contacting the factory. Improper repair actions will void the warranty and can result in damage to the fixture components. Driver and LED components are custom configured at the factory. Generic replacements CANNOT be used – If parts need replacing, obtain from factory; properly configured for each fixture.

If directed to make a repair, turn off power to the fixture before disassembly. **CAUTION** – Some fixtures have multiple circuits running through the wiring compartment including un-switched circuits. BE SURE ALL POWER IS OFF.

Fixture Disassembly

Lens Removal: See Step 5, Figure 8 above.

Reflector Removal (Figures 10 & 11)
Remove reflectors by turning Cams (O) with a flat blade screwdriver, then tilt reflectors inward until free.

LED Tray Removal (Figure 12 & 13)
Generally, LED Trays do not have to be separated from the fixture to access the driver, they can loosely hang from the fixture temporarily. With Reflectors removed, lower LED tray by turning Latches (P) with a flat blade screwdriver and tilt tray outward.

If necessary to completely remove LED Trays, use a small pointed tool to press Tab (Q) on the Push-in Connector until wire is disconnected. Do not pull wires without fully pressing the tab as the connectors can be torn from the board.

Figure 8

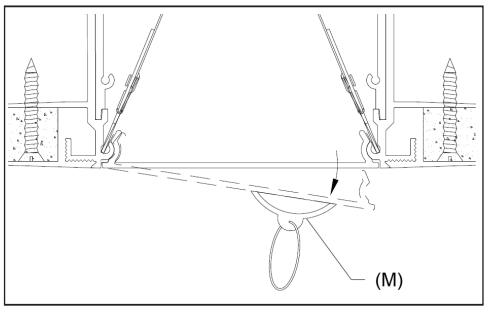

Figure 9

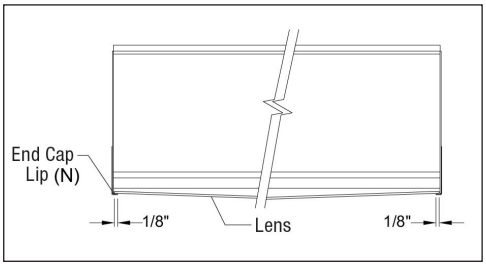

Figure 10

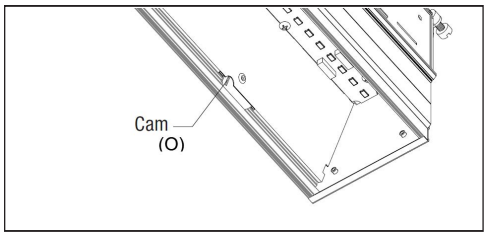

Figure 11

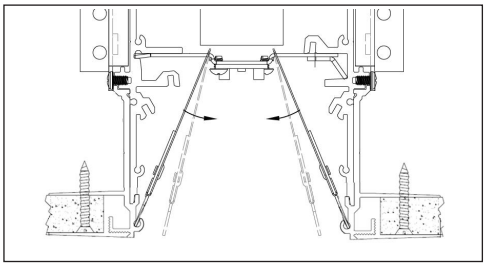

Figure 12

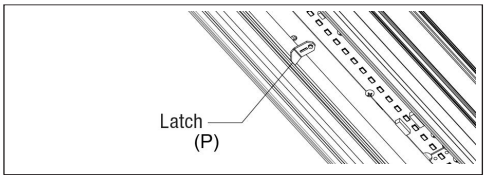

Figure 13

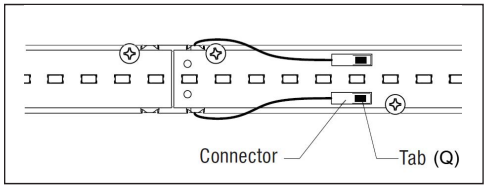

Driver Replacement (as needed)

Note wire color and position for proper re-installation. To disconnect wires, use a small pointed tool to press tab on the Push-in Connector until wire is free. Unscrew driver to remove. Reinstall only factory configured exact replacement. Reinstall wires in their original position by pushing into connector.

Fixture Reassembly

When reinstalling wires to LED Trays, ensure polarity is the same as when removed. Reversing wires can damage the electronics.

LED Trays (Figure 14)
Tilt the edge of the LED Tray into the cavity until the edge is firmly in the Tray Channel (R). Raise the other end of the LED Tray all the way up, and Turn Latches (S) sufficiently to secure the LED Tray in its place.

CAUTION – Do not over tighten Latches or you may distort the extrusion and prevent the lens from snapping firmly into place.

Reflectors (Figure 15)
Insert Tab located at the top edge of Reflector into the slots in the LED Tray (T). Tilt bottom edge of reflector toward the outside of the fixture and fully turn cams to securely hold reflector against the housing. If reflectors do not fit easily, LED Tray or Reflector Tabs are not positioned correctly.

CAUTION – Do not over tighten cams or you may distort the extrusion and prevent the lens from snapping firmly into place.

Lenses: See Step 5, Figure 9 on page 3)

Figure 14

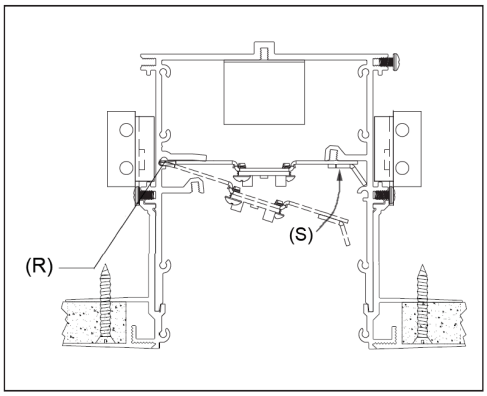

Figure 15

