# Remote Driver Installation

**Installation Instructions**

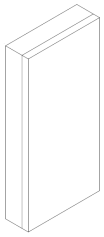

All series with external drivers/decoders

**OVERVIEW:** Some fixture types utilize remote drivers due to limited internal space or in some cases to improve access to electronics for ease of maintenance. In these cases Starfire provides the driver or decoder electronics, pre-mounted and wired in various enclosures. The specific type of enclosure will be designated on the approved submittal drawings. Mounting, connections and distance limitations are discussed below. Please contact the factory for special conditions.

## Preparation

- Select driver enclosure location within specified distance to fixture section(s) it supports.
- If wall mounted, ensure structural blocking is present to support enclosure.
- Ensure there is a clear path to route cabling with connectors from the fixture section(s) to the designated enclosure.

## WARNING:

- Do not drill through side-wall of fixture or enclosure for any reason.
- Power and dimming wiring must be installed according to local electrical codes.

## Dimensions

| Enclosure | Length | Width | Depth |
|---|---|---|---|
| Single | 24.000" | 2.125" | 2.125" |
| Dual | 25.000" | 4.947" | 3.000" |
| Quad | 25.000" | 10.00" | 3.000" |

## Step 1: Unpacking

Unpack fixtures and enclosures. Refer to fixture and enclosure labels to ensure correct enclosure is located for connection to its designated fixture sections.

**NOTE:** Drivers are configured to connect to specific fixture sections and are labeled accordingly. When multiple drivers are in a single enclosure, ensure the correct fixture section is plugged into the correct driver. Failure to do this can damaged LEDs and void the warranty.

## Step 2: Mounting

Remote driver enclosures come equipped for both top of grid mounting and surface mounting. Grid clip brackets are attached to the enclosure. For single driver enclosures there are 2 clips that snap into a single grid member usually directly above the fixture section. For dual and quad driver enclosures there are 3 clips. 2 snap into one grid member and the 3rd on a perpendicular intersecting grid member. This provides stability for the wider enclosure.

If the enclosure is to be grid mounted, select the appropriate location and if necessary rotate the grid clips so they align with the chosen grid member.

If the enclosure is to be surface mounted, open the screw-on cover. Single enclosures have a snap-on cover with a notch on one edge allowing a screwdriver to pry the cover off (Fig 1). Dual and Quad enclosures have 4 screws on the face of the cover. Remove them and lift to cover off (Fig 2). Once open remove the bolts and nuts holding the grid clips. The now empty holes are to be used for screws going into the structure blocking at the mounting location.

## Step 3: Cabling

Fixture sections must be connected to their remote drivers using Starfire cables with factory installed polarized connectors. Fixture sections come equipped with 6 foot low voltage plenum type cables. These are generally adequate to reach single grid mounted driver enclosures near the fixture. When enclosures are mounted away from the fixture, Starfire extension cables must be purchased and used.

Figure 1 - Single Driver

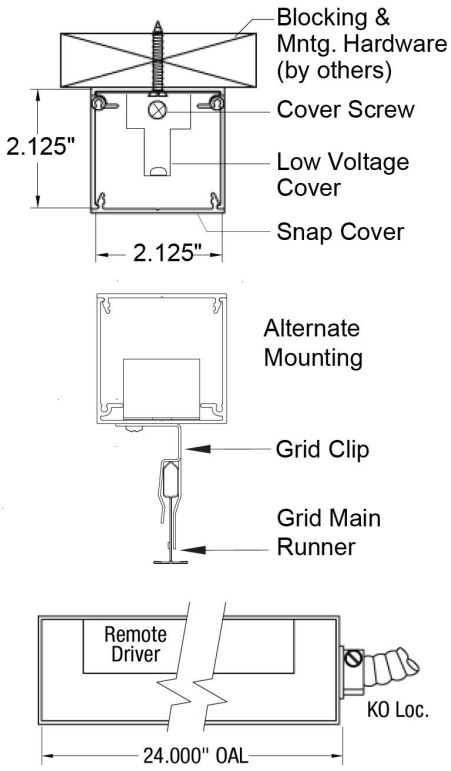


Figure 2 - Dual Driver

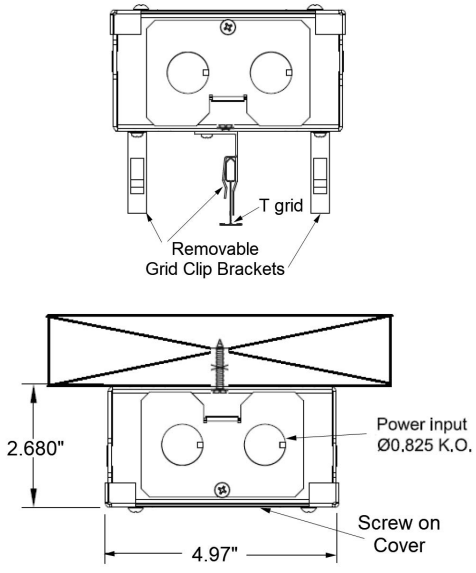

## Step 3: Cabling - continued

For static white and tunable white, extension cables are available in 10 foot increments to 50 feet. If site conditions require greater lengths contact the factory.

For RGB/W, extension cables are available to a maximum of 35 feet. These cables include a suppressor module to prevent PWM crosstalk from damaging the LEDs.

## Step 4: Wiring

All components within the remote enclosure are prewired together so the only wiring necessary, is to connect the power and dimming controls and plug in the designated fixture sections low voltage cabling.

In some circumstances in addition to drivers, the enclosure can include other components such as DMX decoders, DMX power supplies, EM packs, 924 GTD dimming disable relays and LED board regulators. These components will also be prewired at the factory.

All enclosures have industry standard 1/2" trade knockouts for conduit connectors (by others).

Power and dimming wires are connected as follows:

**Wiring Codes**

| Function | 0-10V Standard | ECO Lutron | DALI |
|---|---|---|---|
| Switched Line (120-277V) | Black | Black | Black |
| Neutral | White | White | White |
| Ground | Green | Green | Green |
| 0-10V (+) Intensity | Purple | | |
| 0-10V (-) Intensity | Grey or Pink* | | |
| 0-10V (+) CCT - TW only | Red | | |
| 0-10V (-) CCT -TW only | Blue | | |
| E1 Intensity and TW CTT | | Purple | |
| E2 Intensity and TW CCT | | Grey or Pink* | |
| D(+)Intensity and TW CCT | | | Purple |
| D(-)Intensity and TW CCT | | | Grey or Pink* |

* Per NEMA Bulletin #119

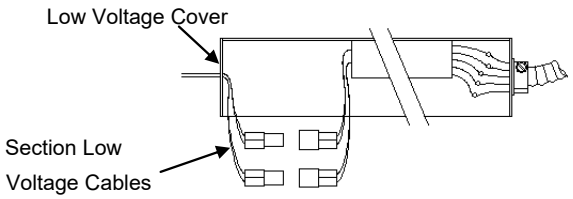


All enclosures have a low voltage cable access port. Remove the cover screw, pass cable(s) through the port and plug into the designated concectors. A small amount (1 or 2 feet) of excess cable can be held in the enclosure. Longer excess cable should be bundled and tied off outside the enclosure. When finished reinstall the access cover.

## Service and Repair

Do not attempt to repair fixtures without first contacting the factory. Improper repair actions will void the warranty and can result in damage to the fixture components. Driver components are custom configured at the factory. Generic replacements CANNOT be used – If parts need replacement, obtain from factory; properly configured for each fixture.
If directed to make a repair, turn off power to the fixture before disassembly.

**CAUTION** – Some enclosures have multiple circuits running through the wiring compartment including un-switched circuits. **BE SURE ALL POWER IS OFF**.

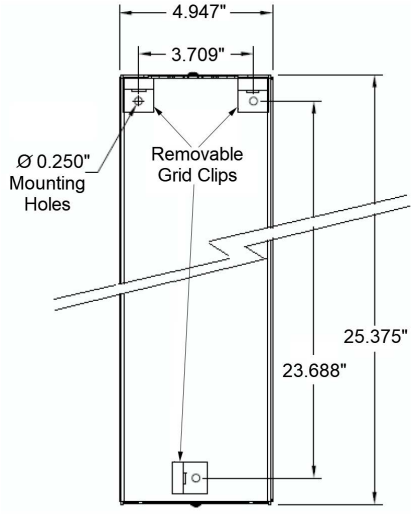


Figure 3 - Quad Driver

