LED Work Station

Series LWS - 120V

LED LINEAR LIGHTING SYSTEM

Installation Instructions

WARNING: These products may present a possible shock or fire hazard if improperly installed. Fixture should be installed in accordance with these instructions, local electrical codes and/or National Electric Code (NEC).

TO AVOID ELECTRIC SHOCK, disconnect power prior to installation.
Caution: Injury to persons and damage to the fixture and/or mounting surface may result if the fixture is pulled from the surface. To reduce the likelihood of such injury or damage, mount on a surface that is mechanically sound.

Supply wires connection via rear access door

1. Select a knockout location on the fixture that is best suited for the installation. Knockouts are located along the back and top of housing. The rear access door that is located in the middle back of housing also has its own knockout for quick connection to supply wires, forgoing the need to remove the cover and opening the wiring compartment, (see Fig. 2).

   NOTE: See next section if another knockout location is to be used for connection to supply wires.

2. Remove screw that secures rear access door using a Philips screwdriver and remove knockout as required, (see Fig. 1).

3. Install cable connecter that is appropriate for the supply wire according to National Electric Code and local codes, (see Fig. 3). Use 14 or 12AWG solid copper wires.

4. Strip back insulation on supply wires 3/8" and use push-in wire connector inside housing to connect wires: Black to Black, White to White and Yellow/Green stripe to Yellow/Green stripe.

5. Replace rear access door and secure with screw.

Supply wires connection via housing knockouts

1. Remove cover of wiring compartment by removing screws at each end.

2. Punch out whichever knockout is best suited for connection to 120V supply wires. Knockouts are located along back and top of housing, (see Fig. 2).

3. Install (MC) Metallic Cable clamp connector and connect fixture wires according to National Electric Code and/or local building code requirements.

4. Attach line voltage AC supply wires to fixture lead wires: Black to Black, White to White, Green or bare wire to Yellow/Green (Ground) inside the fixture. Secure each connection using the push-in wire connector provided on the fixture lead wire.

   NOTE: Electric shock, overheating, low or no light output and shortened fixture life can result if proper grounding is not performed.

5. Replace the wiring compartment cover.

Mounting fixture

1. Position fixture at desired location and use Philips screwdriver to tighten mounting screws and secure in place.

Additional safety measures:

1. Do not look directly at LED light source.
2. Do not touch the LEDs.
3. **WARNING! CAUTION - RISK OF FIRE**: Keep fixtures away from curtains and other combustible materials.
4. Suitable for indoor dry locations only.
5. This product is suitable for use on dimming circuits. For best results (5-100% lighting control), use Lutron DVCL-153P or similar types of dimmers.

starfire Starfire Lighting, Inc. 7 Donna Drive, Wood Ridge, NJ 07075 P: 201.438.9540 F: 201.438.9541 www.starfirelighting.com

LED Work Station

Series LWS - 120V

LED LINEAR LIGHTING SYSTEM

Figure 1.

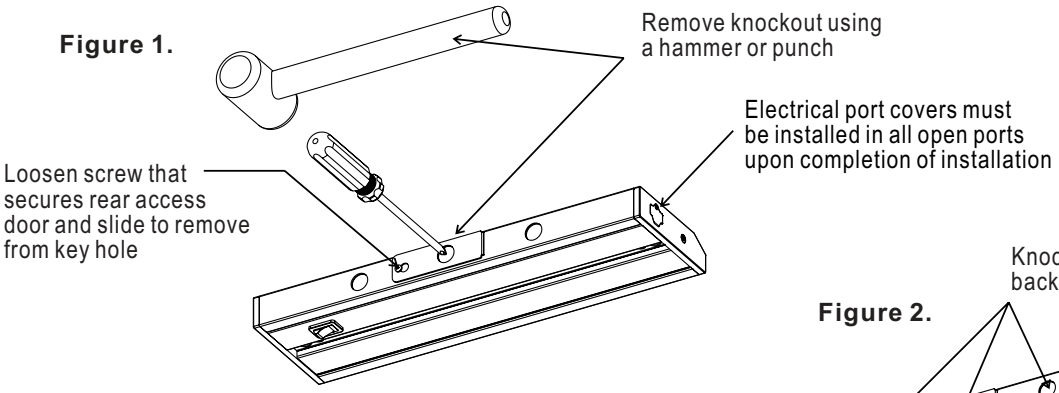

Figure 2.

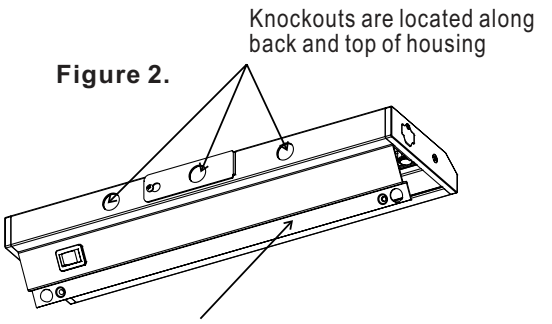

Wiring can also be performed by removing the fixture cover (disengage screws and lockwashers). After wiring, replace the cover making certain lockwashers are located beneath screw heads to properly ground cover.

Figure 3.

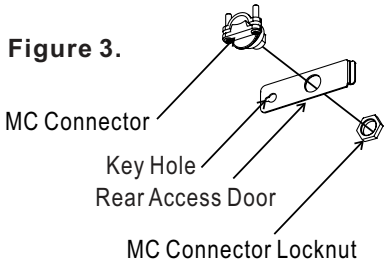

Figure 4.

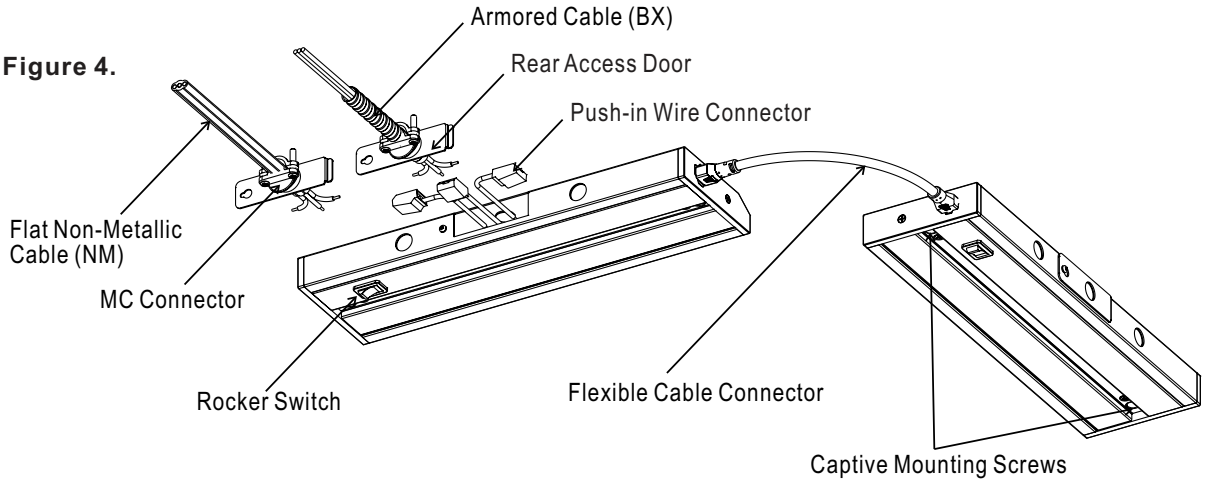

Figure 5.

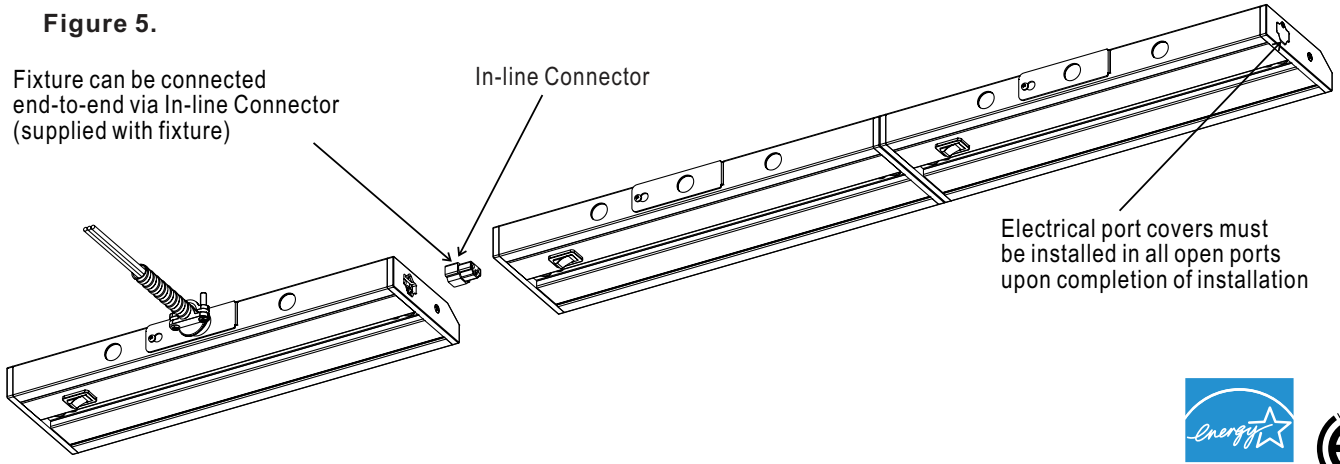

Direct Wire Juction Box

For use with LED Work Station 120V

Installation Instructions

IMPORTANT: This Direct Wire Junction Box is to be used only with Starfire Lighting 120V LED Work Station fixtures. This Junction Box is designed to be wired using Non-Metallic Cable (NM) or Armored Cable (BX) supply wires.

Important safety instructions:

1. Read all instructions before beginning installation. Safely store these instructions for future reference.
2. Do not use this Junction Box or the Jumper Cable to provide power to other products.
3. CAUTION: Do not exceed 5 AMPS maximum load.
4. For use with 120V 60Hz. power supply only. For interior dry location use only.
5. WARNING: DO NOT CONNECT THE JUNCTION BOX UNTIL THE FOLLOWING CONDITIONS HAVE BEEN MET:
   - **A.** Mounting and wiring of Junction Box is complete.
   - **B.** The Junction Box cover has been replaced and screws securely fastened.
   - **C.** All fixtures connected to Junction Box have been mounted.
   - **D.** All open electrical ports on Junction Box and connected fixtures have been covered with electrical port covers provided with fixture.
6. WARNING: To prevent overheating do not install in small enclosed spaces. To prevent electrical shock do not install in wet environments.
7. Qualified electricians, in accordance with local electrical codes, should perform all installations.
8. This product is suitable for use in dimming circuits. For best results (between 5-100% lighting control) use Lutron DV600P, S600, DVCL-153P or Lutron "CL" type dimmers.
9. Always turn off electrical power to this product before servicing.
10. Do not operate this product if Flexible Cable Connector has been damaged.
11. Keep Flexible Cable Connector away from sources of heat and heated surfaces.
12. Do not operate this product in environments where aerosol sprays are being used or where oxygen is being administered.

Direct wire junction box installation:

1. Turn off power to associated electrical circuit at electrical service panel.
2. Remove Junction Box cover screws and remove cover. Save screws and lockwashers.
3. Prepare Flat Non-Metallic Cable (NM) (2C+Ground) or Armored Cable (BX) by stripping conductor ends approximately 3/8".
4. For Installation using 1/2" Die-Cast Metallic Cable Clamp MC Connector, (see Fig.1):

   Determine mounting orientation and remove one Side Knockout on desired side of Junction Box for electrical supply. and attach 1/2" MC Connector to Junction Box as shown. Affix MC Connector to electrical supply (BX or NM). NM Cable outer jacket must protude thru MC Connector to adequately protect internal conductors.
5. Tighten locknut and clamping screw(s) on electrical connector fitting securely.
6. Push stripped ends of wires into hole in Push-in Wire Connectors (see WIRING DIAGRAM). Supply wires are typically color-coded: Hot-black, Neutral-white, Ground-green or bare copper. Note that black supply wire goes into Connector with black wire and white goes into connector with white wire. Green goes into green wire.
7. Push excess electrical supply wire back into wall and locate Junction Box on mounting surface. Affix Junction Box to underside of cabinet with captive screws provided. Be careful not to drive screws all the way though the cabinet bottom. Use shorter screws if necessary .
8. Replace and secure wiring Junction Box cover with supplied screws. Make certain lockwashers are located beneath screw heads to properly ground cover.
9. Follow installation instructions provided with Work Station fixtures. Mount fixture, and insert Flexible Cable Connector (sold separately) or In-line Connector (supplied with fixture) into appropriate Electrical Port of Direct Wire Junction Box.
10. Make sure that all fixtures connected to Junction Box have been properly installed and that all open Electrical Ports on the Module and fixtures are safely covered with Electrical Port Covers.
11. Restore circuit power at electrical service panel. Turn on Master switch on Junction Box and turn on switches on each individual fixture. Master Switch can be used to control all fixtures simultaneously or fixtures can be operated individually.

Direct Wire Juction Box

For use with LED Work Station 120V

Figure 1:

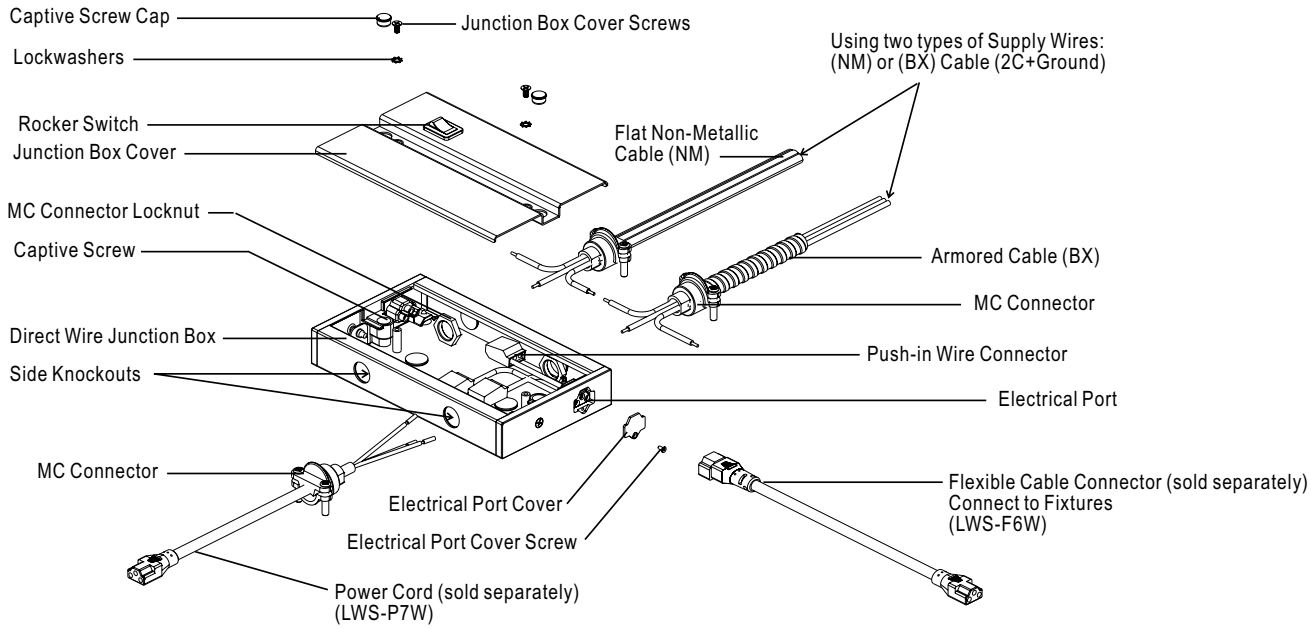

Figure 2:
WIRING DIAGRAM

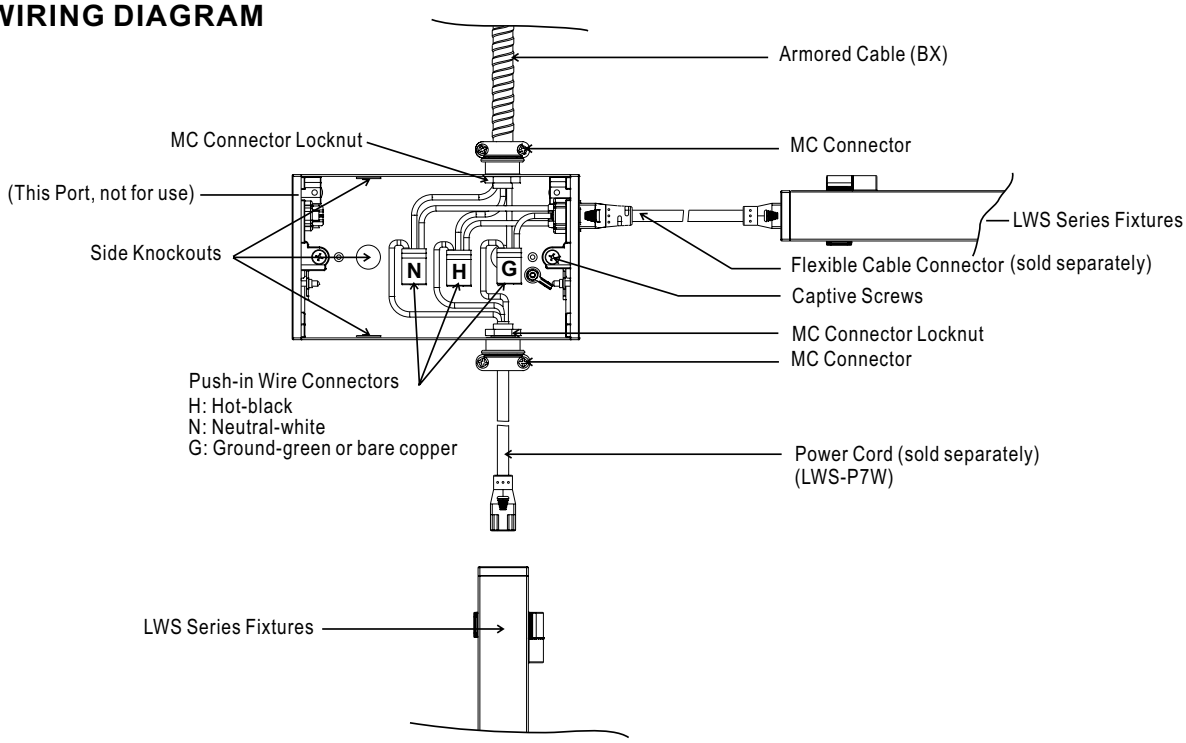

Direct Wire Juction Box with Occupancy Sensor

For use with LED Work Station 120V

Installation Instructions

This Direct Wire Junction Box is to be used only with
LED Dimmable Work Station and LED strips.
This Junction Box is designed to be wired using Non-Metallic Cable
(NM) or Armored Cable (BX) supply wire

INSTALLATION SHOULD BE CARRIED OUT BY YOUR LOCAL ELECTRICIAN.

c ETL US
Intertek
4005816

SAVE THESE INSTRUCTIONS

For parts and accessories,please refer to product catalog.

■ IMPORTANT SAFETY INSTRUCTIONS

1.Read all instructions before beginning installation.Safely store these instructions for future reference.
2.Do not use this Junction Box or the Jumper Cable to provide power to other products.
3.CAUTION: Do not exceed 4 AMPS maximum load
4.For use with 120V 60Hz. power supply only. For interior dry location use only.
5.WARNING: DO NOT ELECTRITY THE JUNCTION BOX UNTIL THE FOLLOWING CONDITIONS HAVE BEEN MET:
a.MOUNTING AND WIRING OF JUNCTION BOX IS COMPLETE.
b.THE JUNCTION BOX COVER HAS BEEN REPLACED AND SCREWS SECURELY FASTENED.
c.ALL FIXTURES CONNECTED TO JUNCTION BOX HAVE BEEN MOUNTED.
d.ALL OPEN ELECTRICAL PORTS ON JUNCTION BOX AND CONNECTED FIXTURES HAVE BEEN COVERED WITH ELECTRICAL PORT COVERS PROVIDED WITH FIXTURE.
6.WARNING: TO PREVENT OVERHEATING DO NOT INSTALL IN SMALL ENCLOSED SPACES. TO PREVENT ELECTRICAL SHOCK DO NOT INSTALL IN WET ENVIRONMENTS.
7.Qualified electricians, in accordance with local electrical codes, should perform all installations.
8.UL approved dimmers may be used with Series LED Dimmable Work Station and LED strips.
This product is suitable for use in dimming circuits.
9.Always disconnect electrical power from this product before cleaning or putting on or taking off parts
10.Do not operate this product if Jumper Cord has been damaged.
11.Keep Jumper Cord away from sources of heat and heated surfaces.
12.Do not operate this product in environments where aerosol sprays are being used or where oxygen is being administered.

■ DIRECT WIRE JUNCTION BOX INSTALLATION

1.Turn off power for appropriate electrical circuit at electrical service panel
2.Remove Junction Box cover screws and remove cover.Save screws and lockwashers.
3.Prepare Flat Non-Metallic Cable (NM)(2C+Ground)or Armored Cable (BX) by stripping conductor ends approximately 3/8″.
4.For Installation Using 3/8" Miniature Die-Cast Electrical Connector:(Supplied with Junction box) Determine mounting orientation and remove one SIDE KNOCKOUT on desired side of Junction Box for electrical supply.
and attach 3/8" Miniature Die-Cast Electrical Connector to Junction Box as shown. Affix 3/8" Miniature Die-Cast Electrical Connector to electrical supply (BX or NM).NM cable outer jacket must protude thru 3/8" Miniature Die-Cast Electrical Connector to adequately protect internal conductors.
6.Tighten locknut and clamping screw(s) on electrical connector Fitting securely
7.Push stripped ends of wires into hole in PUSH- IN WIRE CONNECTORS (see WIRING DIAGRAM.) Supply wires are typically color-coded: Hot-black,Neutral-white, Ground-green or bare copper.Note that black supply wire goes into Connector with black wire and white goes into connector with white wire.green goes into green wire.
8. Push excess electrical supply wire back into wall and locate Junction Box on mounting surface.Affix Junction Box to underside of cabinet with captive screws provided. Be Careful not to drive screws all the way though the cabinet Bottom.Use shorter screws If necessary .
9. Replace and secure wiring Junction Box cover with supplied screws.make certain lockwashers are located beneath screw heads to properly ground cover.
10. Follow installation instructions provided with undercabinet light fixture. Mount fixture, and insert Jumper Wire (sold separately) or Direct end-to-end Connector (supplied with fixture) into appropriate Electrical Port of Direct Wire Junction Box
11. Make sure that all fixtures connected to Junction Box have properly installed and that all open Electrical Ports on the Module and fixtures are safely covered with Electrical Port Covers.
12. Restore circuit power at electrical service panel. Turn on Master switch on Junction Box and turn on switches on each individual fixture. Master Switch can be used to control all fixtures simultaneously or fixtures can be operated individually.

c ETL US

Direct Wire Juction Box with Occupancy Sensor

For use with LED Work Station 120V

IMPORTANT: Always turn off main power before installation

Figure 1:

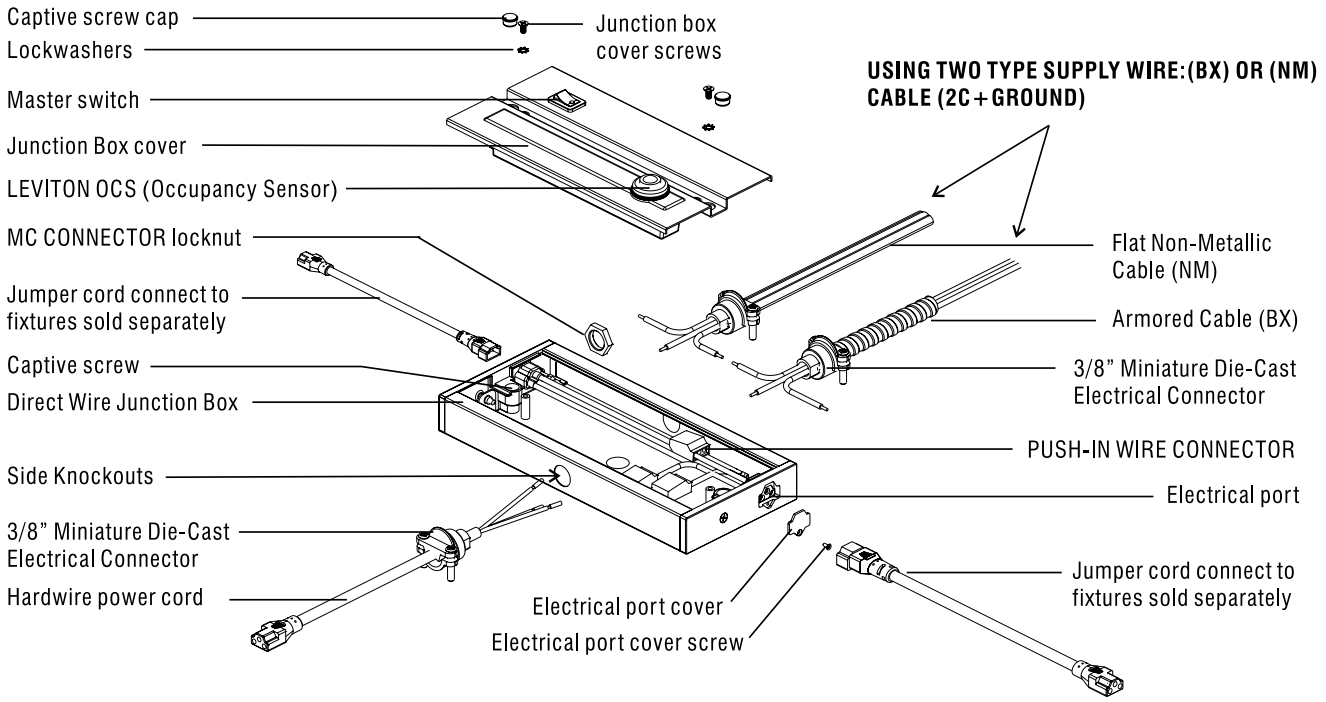

Figure 2:
WIRING DIAGRAM

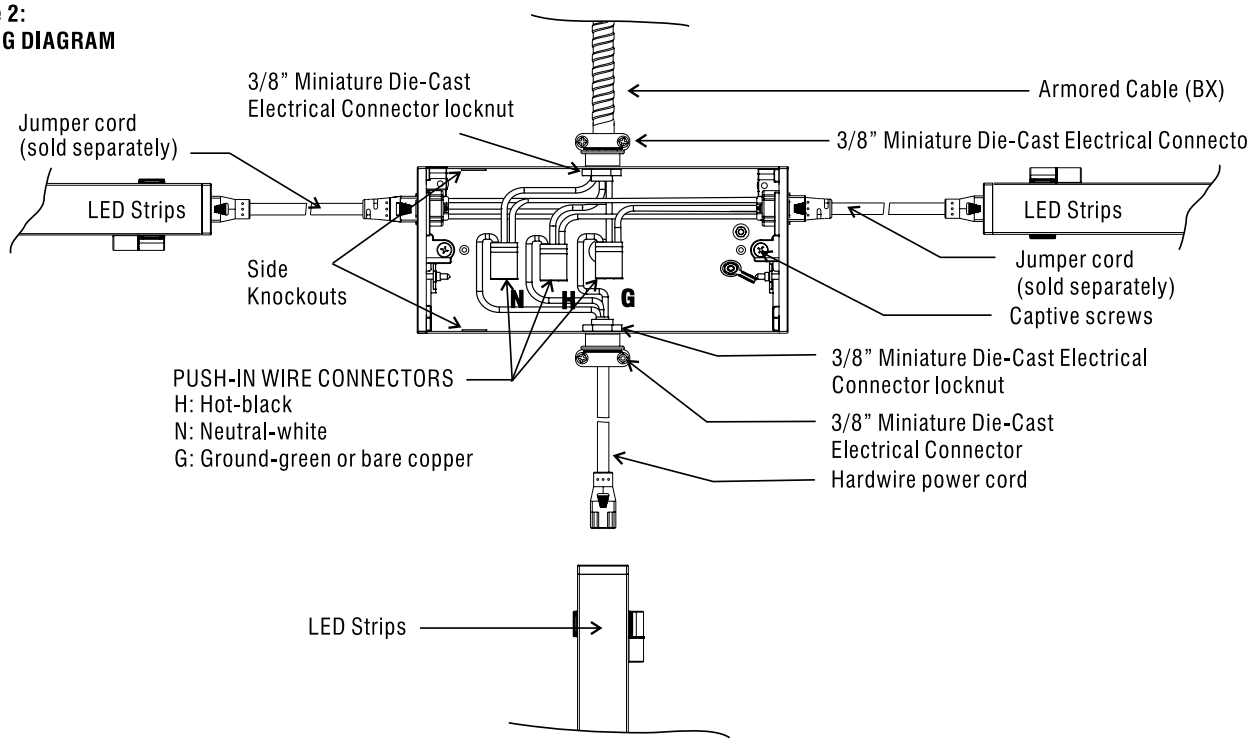

Direct Wire Juction Box

For use with LED Work Station 120V

Occupancy Sensor Junction Box
LWS-OCW-1

Height: 1.5" (including occupancy sensor)



Junction Box
LWS-JBW-1

Height: 1"

