1" Indirect LED Bracket Mount

Series BUX1

Linear Indirect LED Bracket Mount with External Driver

Installation Instructions



Overview: BUX1 is a linear fixture utilizing high performance LED boards. It is intended to be installed on a wall surface by attaching the provided mounting brackets to an electrical junction box at the power feed end, and structural blocking at the other locations. AC power is applied at the remote driver enclosure and LED power/dimming is delivered from the enclosure via Class 2 plenum wire. When multiple fixture sections are required to create a continuous fixture in excess of 8 feet, each fixture section has its own plenum cable running to its own remote driver. Single, Dual and Quad driver remote enclosures are available.

Preparation

*** Submittal drawings will show remote driver enclosures (single, dual or quad) and the specific fixture sections that connect to each.**

*** Fixture sections are shipped with 6 foot long Class 2 cables that have polarized connectors at each end. Inside the fixture section is a Male connector which mates with the cable's Female connector.**

*** If the remote driver enclosure is within 6 feet of the fixture section, the Male end of the cable will plug directly into the designated driver inside the enclosure. If the distance is greater that 6 feet, order connectorized extension cables from Starfire. This will ensure polarity is not accidentally reversed (which would damage the fixture section and/or driver). Starfire will also ensure correct wire gauge is used to minimize voltage drop on longer lengths. Failure to use Starfire extension cables can void the warranty**

*** Mount the remote driver enclosure to building structure and route the power/dimming control wiring to the enclosure with adequate slack to make connections inside the enclosure. Position enclosures within specified cable lengths, ensuring access for service.**

WARNING:

- Do not drill through side-wall of fixture for any reason.
- Some disassembly is required for fixture installation. Only disassemble components as directed.
- When reinstalling LED lighting module, ensure it fully snaps into position. Failure to do so will allow module to dislodge and fall from the fixture.
- Power and dimming wiring must be installed according to local electrical codes.

Figure 1 - shows the overall fixture dimensions and low voltage power feed junction box at the feed location, typically one per fixture section. This should be a 2"x4", horizontally mounted J-Box, also sometimes referred to as a "Handy Box". Refer to approved submittal drawings for location.

Figure 2 - shows a standard single driver remote enclosure. Profiles for Dual and Quad enclosures are shown on submittal drawings and on the separate *Remote Driver Installation Instructions*.

Figure 3 - shows the mounting brackets. Only the power feed location includes a separate bracket to mount onto the J-Box, while the same two-piece fixture bracket is used at all other locations. The power feed brackets include a hole in the brackets (and fixture housing) to pass the Class 2 cable and connector into the fixture. This figure also shows the J-Box Bracket, horizontally positioned for mounting on the power feed electrical junction box.

Figure 1

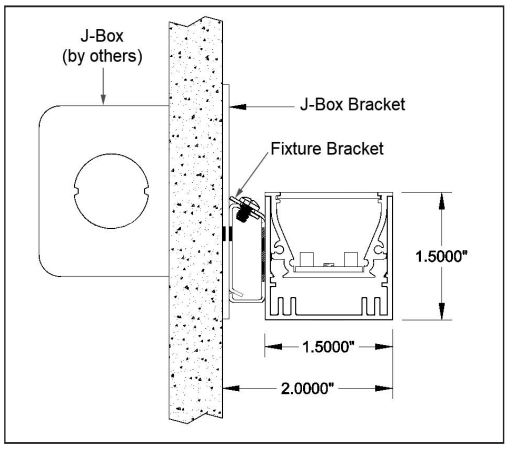

Figure 2

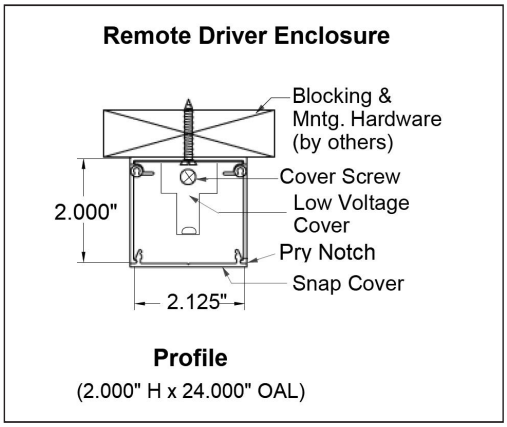

Figure 3

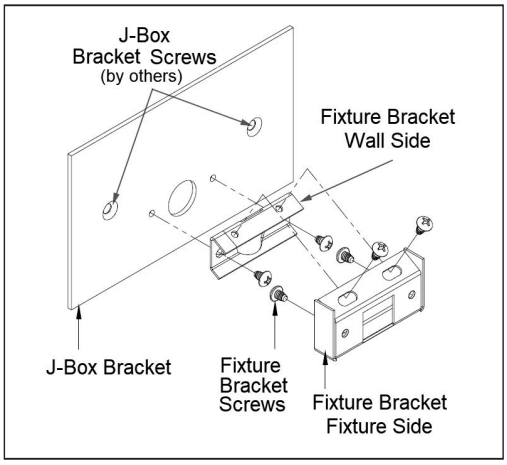

1" Indirect LED Bracket Mount

Series BUX1

Linear Indirect LED Bracket Mount with External Driver

Step 1: Unpacking

Unpack fixtures from crates or boxes. Use fixture section labels and approved submittal drawings to position fixtures in their proper location. Sections are cut and wired for installation in their defined positions only. Lighting modules are shipped installed in their fixture sections.

Locate the remote driver enclosure for each fixture section. Drivers are programmed specifically for each section and must only be connected to their designated section as shown on the labels.

The Class 2, low voltage plenum cables are provided with polarized connectors that mate to the drivers at one end and to the lighting module in the fixture section at the other end. Standard cable length is 6 feet. Extension cables are also provided if pre-ordered and specified on the approved submittal drawings.

Step 2: Mounting Remote Driver (single enclosure)

Mount the remote driver designated for each section to blocking at a location where the Class 2 cables can be routed to the Handy Box at the powered end of the corresponding fixture section.

To access the mounting holes and the wiring compartment, remove the Snap Cover from the driver enclosure by twisting a small screwdriver in the Pry Notch along one edge of the cover (Fig 2).

Insert mounting screws (by others) through pre-drilled holes and fasten driver enclosure to appropriate structure.

Refer to *Remote Driver Installation Instructions* for Dual and Quad enclosure mounting.

Step 3: Remote Driver AC Wiring

If driver enclosure was ordered with optional whip, snap driver box cover back into place and make power connections at the junction box where the other end of the whip is to be terminated.

Otherwise, remove knockout at the one end of the driver box and attached conduit using standard connectors (by others). Make power connections and when finished, snap the enclosure cover back on.

DO NOT Energize the Remote Driver until its fixture section(s) are all fully installed and low voltage connections are completed.

Step 4: Disassembly

Note: When required, its easier to disassemble fixtures prior to mounting on the wall. To avoid mixing parts between fixtures, disassemble the fixtures as they are installed and reassemble them when work on each is completed.

Lighting Module Removal

For fixture section lengths 4 feet or less, the lighting modules needs to be removed to connect the Class 2 cable. For section lengths between 4 and 8 feet only the lighting module at the power feed end needs to be removed to connect the cable.

For fixture runs greater than 8 feet, the run is comprised of multiple sections. The sections are joined by splines and held together with jack screws, all located internal to the housing. To access these parts, lighting modules must be removed at each end.

Installation Instructions

Figure 4

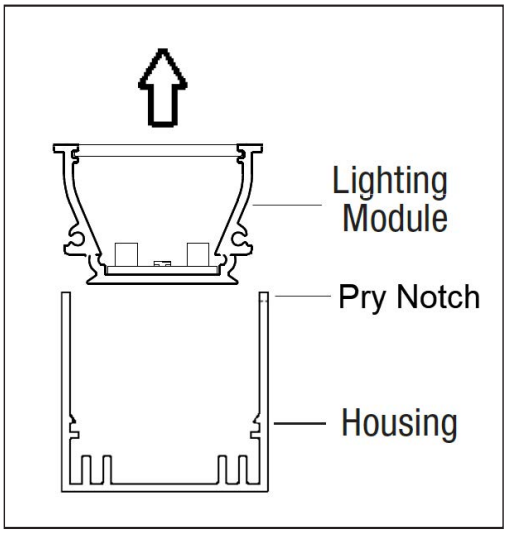

Figure 5

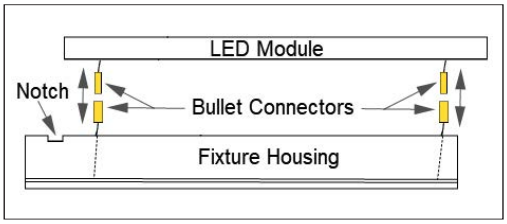

Figure 6

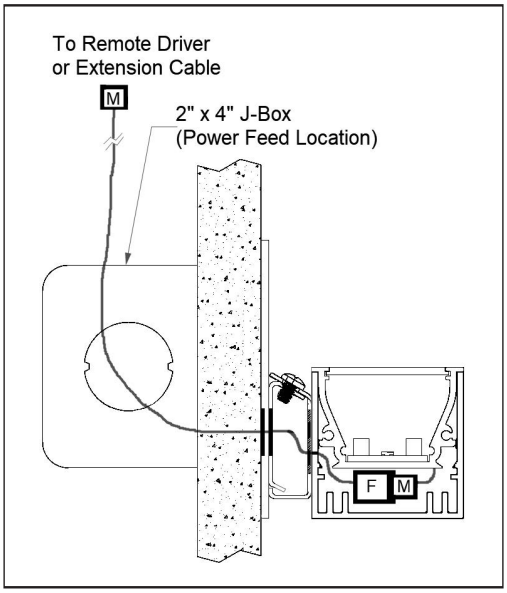

1" Indirect LED Bracket Mount

Series BUX1

Linear Indirect LED Bracket Mount with External Driver

Installation Instructions

Step 4: Disassembly - Continued

The lighting modules are removed by inserting a small flat blade screwdriver into the Pry Notch at one end of the section. Rotate the screwdriver and the lighting module will release from its snap tabs. Then pull the remainder of the module free from the housing (Fig 4).

The lighting modules are attached to power/dimming cables. If necessary to fully remove the lighting module unplug the power/dimming cables (Bullet Connectors) from any adjoining module in the same housing (Fig 5).

Step 5: Mounting Brackets

Note: Fixture section labels may become hidden as fixture sections are installed. Take note of section labels to ensure proper placement of fixture sections.

Install the power feed J-Box(s) at the position(s) indicated on the submittal drawing. Then secure the J-Box Bracket(s) to the J-Box(s) with screws (by others) (Fig 3).

If not previously done - Route the 6 foot Class 2 power cable with Male end, from the junction box up inside the wall to the ceiling where the remote driver enclosure is positioned (or where an extension cable can be attached). Make sure the Female connector extends from the front of the Handy Box by at least 6 inches so it can be routed into the fixture (Fig 6).

Remove screws at top of the Fixture Wall Brackets and separate the Wall Side Plates from the Fixture Side Plates (these remain attached to the fixture) (Fig 3).

Mount the Wall Plates to locations matching the position of fixture sections on the submittal drawings, ensuring that the J-Box cover (with Wall Plate) is mounted to the Handy Box at the Power Feed location. Secure all other Wall Plates to blocking with appropriate Hardware (by others).

Step 6: Mounting Fixtures

Single Section Fixtures: Raise the fixture section into position and at the power feed location, insert the Class 2 cable (Female end) from the junction box into the hole on the fixture housing (Fig 7).

Position the fixture so the bottom tab of Fixture Side Plate is below and behind the bottom tab of Wall Side Plate, and the top tab of Fixture Side Plate is above the top tab of the Wall Side Plate. Rotate and raise the fixture so the Wall and Fixture Plates are fully engaged. Reinstall screws into top tab of the Fixture Plate (Fig 8).

Additional sections: In a multi-section run, ready the next fixture section as indicated on submittal drawings. Identify the next section to be mounted, it will have a label matching the section that is already on the wall. Remove its lighting module as described above.

Before installing the next section, remove the Jack Screw (Fig 9) from the Receiving Bracket inside the housing on this section, DO NOT DISCARD; it will be used to draw the sections together. Removal and installation is best done with a 5/32" ball head Allen driver. One is supplied with each installation.

Loosen (do not take out) the 2 screws that hold the retractable spline in position and fully retract the spline (Fig 10).

Raise the new section into position. Tilt the housing slightly and hook the mounting brackets together. Reinstall the 2 screws removed from the top of each Wall Mounting Bracket, but do not tighten them yet.

Fully extend the retractable joining spline into the other section and tighten its mounting screws.

Figure 7

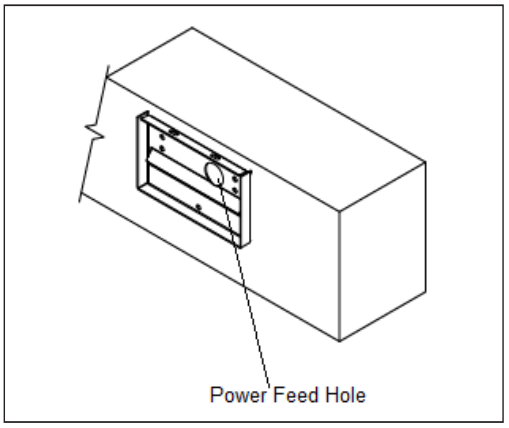

Figure 8

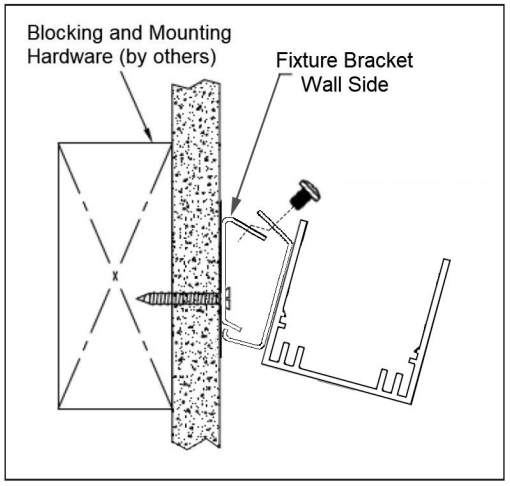

Figure 9

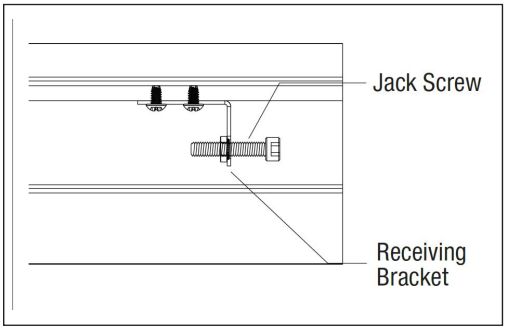

1" Indirect LED Bracket Mount

Series BUX1

Linear Indirect LED Bracket Mount with External Driver

Step 6: Mounting Fixtures - Continued

Reinstall the jack screw through the retractable joining spline and into the receiving bracket (Fig 11). Tighten until the section seam is firmly closed (DO NOT over tighten as it will distort the fixture). Ensure the wiring is not caught in the seam.

Tighten the 2 screws at the top of each Wall Mounting Bracket.

Repeat this process until all fixture housings are mounted.

Step 7: Reinstall Lighting Modules

Lighting Modules and fixture housings are precision cut to length as a matching set. Always return the modules to their original designated housings.

Plug the Male connector on the lighting module into the Female connector from the Power Feed hole (Fig 6). Reconnect the Bullet Connectors to the adjacent lighting module (if any).

Lower the removed lighting modules into place carefully tucking the wires into the housing so they do not interfere with the lighting modules when they are snapped back in place.

Start at one end, align the end of the lighting module with the fixture end cap and press the lighting module into the housing. Continue pressing along its length until the entire module is fully seated in the housing. If it will not fully seat, the cabling is in the way. Remove the module, adjust the cable and reinsert.

Repeat for all the remaining sections.

Step 8: Remote Driver Low Voltage Wiring

After fixture runs and remote driver enclosures are mounted and lighting modules are reinstalled, and if not already done; run the 6 foot Class 2 plenum cables with Male end, from the Handy Box up inside the wall to the ceiling where the remote driver enclosure is positioned (or where an extension cable can be attached).

Plug the appropriate wire into its designated driver. Sections and drivers are shown on the submittal drawings. It is essential the correct fixture section is connected to its designed driver.

Step 9: Finish

Turn power on and test operation of all lighting fixtures.

Installation Instructions

Figure 10

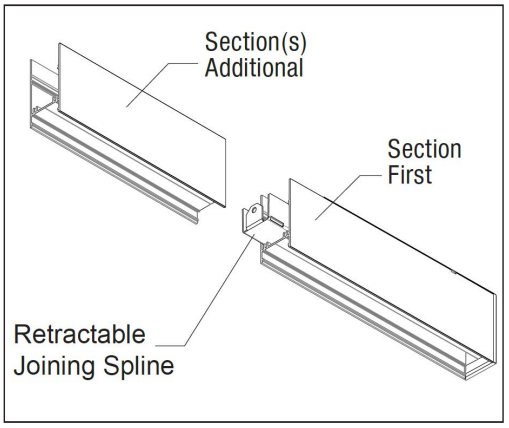

Figure 11

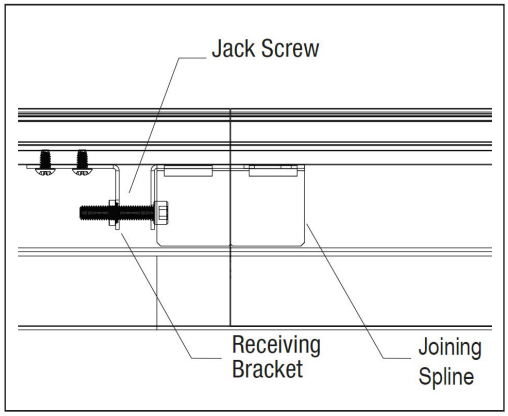

Service and Repair

DO NOT attempt to repair fixtures without first contacting the factory. Improper repair actions will void the warranty and may result in damage to the fixture components. Driver and LED components are custom configured at the factory. Generic replacements CANNOT be used. If any parts need replacing, obtain them from the factory; properly configured for each fixture.

If directed to make a repair, TURN OFF POWER to the remote driver before disassembly.

CAUTION: BE SURE ALL POWER IS OFF BEFORE SERVICING.