2"& 4" LED Low Profile Perimeter Slot

Installation Instructions



Series VRP2/4, VRPX2/4 Regressed Lens

Grid Trim Ceiling (X1 / X9 Trim)

OVERVIEW: VRP fixtures are intended for installation on a perimeter wall and when equipped with a grid trim, to interface with grid ceiling on the opposite side. The fixture is supported by the perimeter wall structure or by suspension from structure above. Ceiling is supported by its grid members. With removable ceiling tiles it is possible to install the fixture after the grid is in place, although it is generally recommended to install the fixture first then bring the grid to the fixture to ensure proper alignment (Figure 2).
Note - Drawings depict VRP4 (internal driver version). All other versions have identical procedures. All dimensions are defined in Figure 1 and table below.

Preparation

Install power feeds at designated locations first.

WARNING:

- Do not drill through side-wall of fixture for any reason.
- Do not disassemble unless specifically advised to do so in installation instructions.
- Power and dimming wiring must be installed according to local electrical codes.

Dimensions (Figure 1)

Fixture	Ceiling Trim X1 / X9	Dim A 9/16	Dim A 15/16	Dim B	Dim C 1" Regress	Dim C 3" Regress
VRP2	Grid Trim	3.125"	3.3125	4.0000"	6.6875"	8.6875"
VRP4	Grid Trim	4.125"	4.3125"	4.0000"	6.6875"	8.6875"
VRPX2	Grid Trim	3.125"	3.3125"	3.0000"	5.6875"	7.6875"
VRPX4	Grid Trim	4.125"	4.3125"	3.0000"	5.6875"	7.6875"

Step 1: Unpacking

Unpack fixtures. Refer to fixture labels for assembly order. Refer to submittal drawing for layout. In most cases, fixtures are shipped with lenses installed and do not need to be removed to complete the installation.

NOTE: Lenses are precision cut to compensate for expansion and eliminate light leak. If removed, they must be installed in their original designated fixtures/sections only. If lenses are shipped separately, ensure they are installed in fixture sections with matching label designations.

Step 2: Mounting Preparation

Wall Bracket - we recommend marking the perimeter wall with the location of the top of the mounting bracket with a chalk line (Fig 3). Set the line at dimension C (Fig 1) above the desired ceiling surface. Threaded rod brackets may be removed if they interfere with structure by taking out the screws. It is not necessary to open fixture.

Threaded Rod or Hanger wire - we recommend marking the perimeter wall at the location D (Fig 1), even with the bottom of the grid flange of the fixture. Threaded rods should be cut so they enter brackets with 1/2" space between rod and fixture housing, with fixture at desired height to allow for minor adjustments. Thread lock nuts onto each rod. Wall brackets may be removed if they interfere with structure by taking out screws. It is not necessary to open fixture.

Step 3: Mounting

Start with the Power Feed Section (Fig 3). If conditions permit, make power connections after installation; otherwise make connections as described below before mounting this section.

Figure 1 - Dimensions

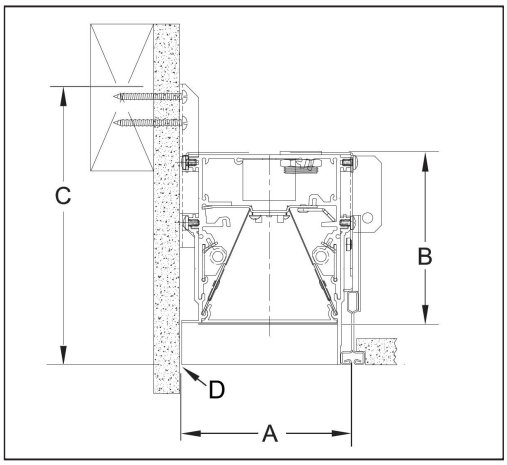

Figure 2 - Locations

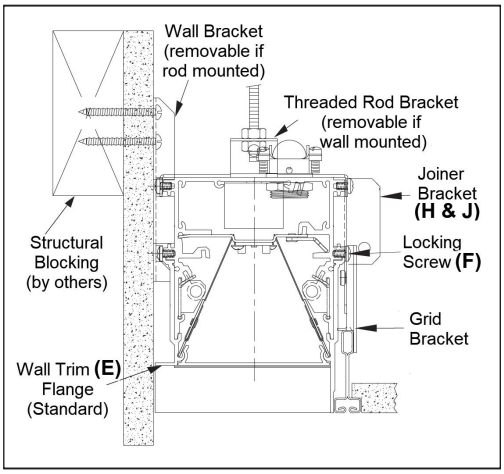

Figure 3 - Mounting

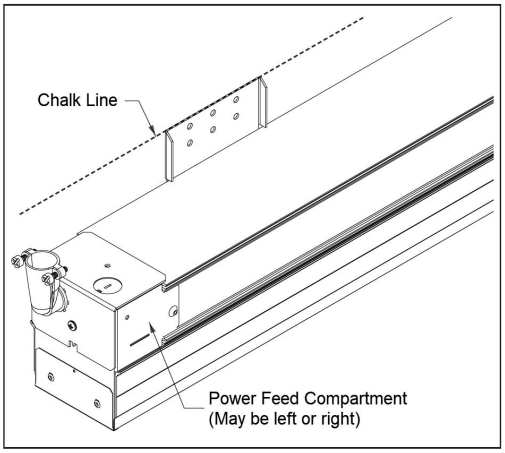

Step 3: Mounting Continued

Raise section into position, align the top of the brackets with chalk line and screw each bracket into position through holes and into structural blocking in the perimeter wall. We recommend 2 screws in each mounting bracket.

If threaded rod, align bottom of fixture with chalk line and thread stop nut onto each rod. When properly aligned tighten lock nut down onto bracket and stop nut.

If fixture has multiple sections, install next fixture section as indicated in the labeling. Position it so matching section labels are at the junction of the sections. Referring to (Fig 4), remove the jack screws (G) from the receiver bracket (H) on the outside edge of the fixture section. Raise the next section into position. Plug the power bus connectors (I) together then slide the spline (J) into the channels (K) of the receiving section. Be sure the bus wires retreat into the wiring compartment and are not pinched between the sections.

Now install the jack screws (G) through the bracket into the receiver bracket and tighten so that the section seam is completely closed. Do not over tighten.

Now screw the mounting brackets of the new section onto the perimeter wall with the top of the brackets on the chalk line, or attach to threaded rod as described above. Repeat this process for all sections in the fixture run.

(Figure 2) If fixture is ordered with wall side trim (E), as "X" instead of standard "F" wall flange trim, then ceiling side of fixture should be supported with hanger wire fastened to structure above. Ceiling side trim can be X1, X9, F1, or F2 (2" fixtures only).

Step 4: Finishing (Figure 2)

Align the ceiling side of the fixture with the grid height by loosening the locking screw (F) on the side of the grid bracket. Slide the grid bracket so it rests on top of the grid member while the bottom of the fixture aligns with the bottom of the grid member, then tighten the locking screw. Repeat along the entire fixture run.

Step 5: Wiring

VRP (Internal Driver) (Figure 5)

If fixture was ordered with optional whip it may not be necessary to remove the Wiring Compartment Access Cover (L). Make all connections at the loose end of the whip. If whip is in the wrong orientation, remove the access cover by removing the Screw (M), rotate the cover, and reinstall it ensuring that Tab (N) goes into the channel, then reinstall the screw on the end of the fixture.

To field-wire the fixture, remove wiring compartment access cover, then remove knockout(s) as required. Attach conduit via an approved connector and leave about 6" of wire extending past the connector. After making connections according to the table below carefully tuck the excess wire into the wiring compartment of the fixture and reinstall the cover as described above.

VRPX (External Driver) (Figures 6 and 7)

Note: Power to the remote driver and wiring between remote driver and fixture must be installed according to local electrical codes.
Remote drivers are programmed to match each fixture and labeled accordingly.

Figure 4 - Internal Driver

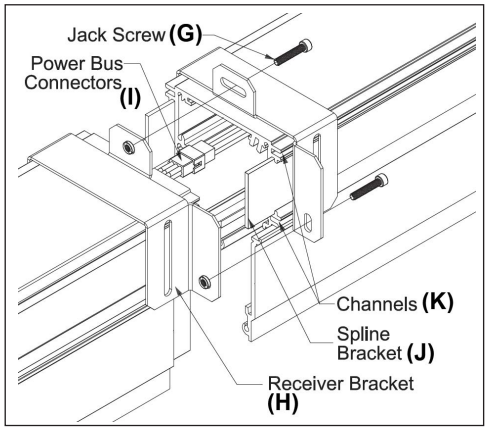

Figure 5 - Internal Driver

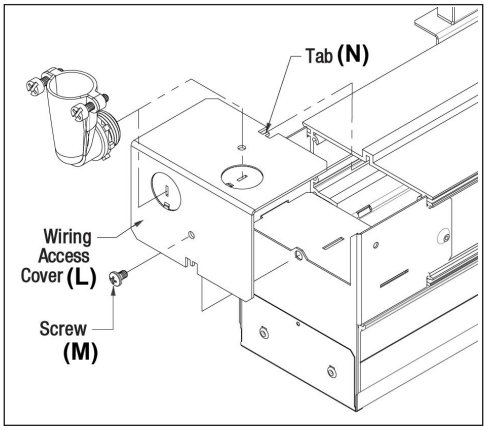

Figure 6 - Remote Driver

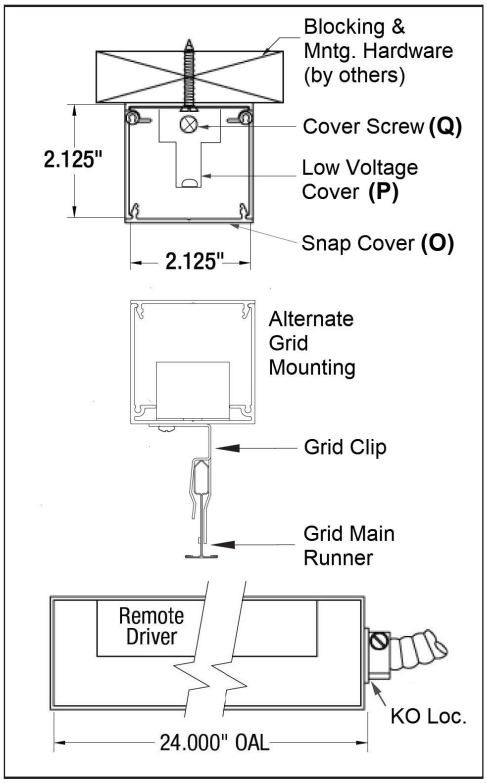

Regressed Lens

Grid Trim Ceiling Installation Instructions

Ensure low voltage cables are connected to their corresponding remote drivers.
To access the mounting holes and wiring compartment, remove the Snap Cover (O) Fig 6, from the remote driver box with a small screwdriver. Remote drivers come with grid clips to allow snapping them onto the top of grid main runners, if permitted by local code. If screw mounting to structure is desired, remove the grid clips and insert mounting screws (by others) through pre-drilled holes to fasten driver box to appropriate structure.
Remove the 7/8" knockout at the line voltage side of the remote driver housing. Attach flex conduit using an approved knockout connector. Make power and dimming connections according the table below.
Each fixture segment has a low voltage plenum cable pre-wired internally. Cables are 6 foot nominal unless longer cables were ordered. Do not disconnect this cable from the fixture segment. If cable is not long enough, contact factory to order an extension cable. Route the plenum cable to the appropriate remote driver enclosure.
Open Low Voltage Cover (P) (Fig 6) by removing Cover Screw (Q). Route the low voltage cable with connector from the fixture section through the opening, and plug into a mating receptacle inside the enclosure. (Fig 7). Reinstall the low voltage cover. In some cases special remote driver enclosures will be provided to support more than one fixture segment. In those cases multiple cables will be run to that enclosure. Make sure each cable is plugged into its matching receptacle based on labeling.

Wiring Codes

Function	0-10V Standard	ECO Lutron	DALI
Switched Line (120-277V)	Black	Black	Black
Neutral	White	White	White
Ground	Green	Green	Green
0-10V (+) Intensity	Purple		
0-10V (-) Intensity	Grey or Pink*		
0-10V (+) CCT - TW only	Purple/White		
0-10V (-) CCT -TW only	Brown		
E1 Intensity and TW CTT		Purple	
E2 Intensity and TW CCT		Grey or Pink*	
D(+)Intensity and TW CCT			Purple
D(-)Intensity and TW CCT			Grey or Pink*

* Per NEMA Bulletin #119

Service and Repair

Do not attempt to repair fixtures without first contacting the factory. Improper repair actions will void the warranty and can result in damage to the fixture components. Driver and LED components are custom configured at the factory. Generic replacements CANNOT be used – If parts need replacing, obtain them from the factory; properly configured for each fixture.
If directed to make a repair, turn off power to the fixture before disassembly.

CAUTION – Some fixtures have multiple circuits running through the wiring compartment, including un-switched circuits. BE SURE ALL POWER IS OFF.

LED and Driver Access

Lens removal (Fig 8). Press the provided suction cup onto the lens and pull down (R). This works best at the center of the lens section. For single section fixtures, it may be necessary to bow the lens slightly to clear both end cap lips.

Lenses are precision cut to match the fixture section. Ensure that lenses are reinstalled in the correct orientation and section from which they were removed.

Reflector removal (Fig 9). Turn Cams (S) with a flat blade screwdriver, then tilt reflector inward until free (Fig 10).

LED Tray removal (Fig 10). Turn Cams (T) with a flat blade screwdriver, then tilt LED tray downward until free. Unless tray needs to be replaced, it is generally not necessary to remove wiring. Simply rotate tray carefully so it hangs on wires at one end.

Figure 7 - Remote Driver

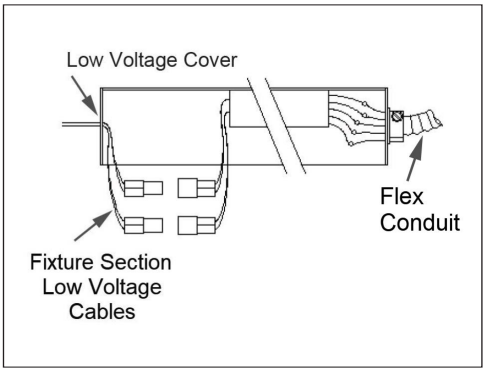

Figure 8 - Lens Removal

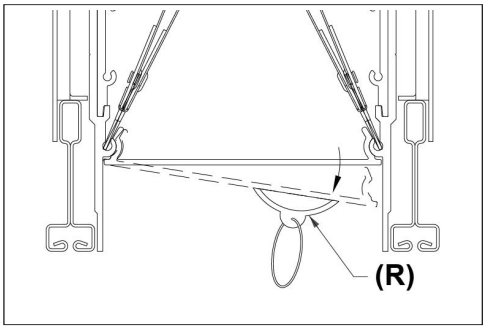

Figure 9 - Reflectors

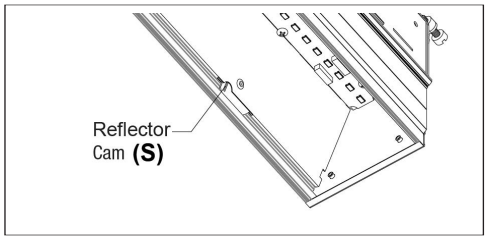

Figure 10 - LED Tray

