2"& 4" LED Low Profile Perimeter Slot

Installation Instructions



Series VRP2/4, VRPX2/4 Regressed Lens — Flange Ceiling Trim

OVERVIEW: VRP fixtures are intended for installation on perimeter walls. When equipped with "F1" or "F2" ceiling flange trim, they can interface with architectural ceilings. The fixture is supported by the perimeter wall or by suspension from the structure above. The ceiling must be supported independent from the fixture. The VRP equipped with Flange Ceiling trim cannot be installed in an opening with ceiling already in place, as access to the wall or suspension rod is above the fixture. Installation sequence calls for the fixture to be mounted first then the ceiling brought to it and set above the flange (Fig 2). Note - Drawings depict VRP4 (internal driver version). All other versions have identical procedures. All dimensions are defined in Figure 1 and the table below. Wall trim is depicted as "F" (Flange), which provides a closed finish. Wall trim of "X" can be ordered which provides a reveal at the wall.

Preparation

Install power feeds at designated locations first.

WARNING:

- Do not drill through side-wall of fixture for any reason.
- Do not disassemble unless specifically advised to do so in installation instructions.
- Power and dimming wiring must be installed according to local electrical codes.

Dimensions (Figure 1)

Fixture	Ceiling Trim F1	Dim A	Dim B	Dim C 1" Regress	Dim C 3" Regress
VRP2	1" Flange Trim	3.625"	4.000"	6.6875"	8.6875"
VRP4	1" Flange Trim	4.750"	4.000"	6.6875"	8.6875"
VRPX2	1" Flange Trim	3.625"	3.000"	5.6875"	7.6875"
VRPX4	1" Flange Trim	4.750"	3.000"	5.6875"	7.6875"

Step 1: Unpacking

Unpack fixtures. Refer to fixture labels for assembly order. Refer to submittal drawing for layout. In most cases, fixtures are shipped with lenses installed and may not need to be removed to complete the installation.

NOTE: Lenses are precision cut to compensate for expansion and eliminate light leak. If removed, they must be installed in their original designated fixtures/ sections only. If lenses are shipped separately,ensure they are installed in fixture sections with matching label designations. Fixtures ordered with optional extension end section(s) are provided with oversized lenses for those sections. They must be field cut to the finished length after the fixture housings is installed.

Step 2: Mounting Preparation

Wall Bracket - we recommend marking the perimeter wall with the location of the top of the mounting bracket with a chalk line (Fig 3). Set the line at dimension C (Fig 1) above the desired ceiling surface. Threaded rod brackets may be removed if they interfere with structure by taking out the screws. It is not necessary to open fixture.

Threaded Rod or Hanger wire - we recommend marking the perimeter wall at the location D (Fig 1), even with the bottom of the ceiling flange of the fixture. Threaded rods should be cut so they enter brackets with 1/2" space between rod and fixture housing with fixture at desired height to allow for minor adjustments. Thread lock nuts on each rod. Wall brackets may be removed if they interfere with structure by taking out screws. It is not necessary to open fixture.

Step 3: Mounting

Start with the Power Feed Section (Fig 3). If conditions permit, make power connections after installation; otherwise make connections as described below before mounting this section.

Raise section into position, align the top of the brackets with chalk line and screw each bracket into position through holes and into structural blocking in the perimeter wall. We recommend 2 screws in each mounting bracket.

Figure 1 - Dimensions

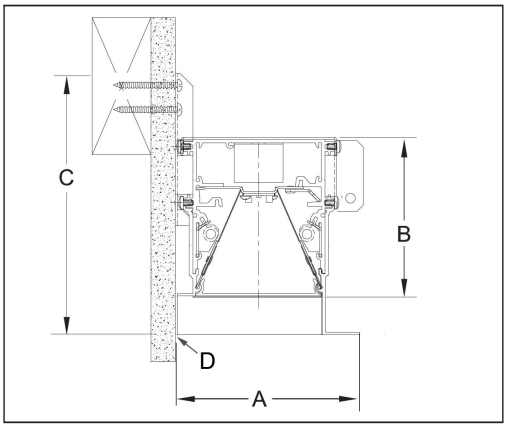

Figure 2 - Locations

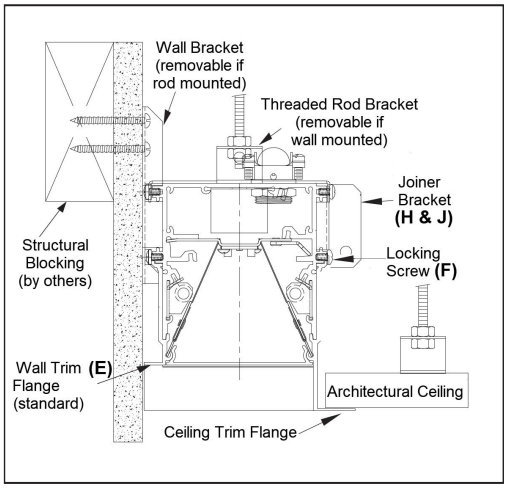

Figure 3 - Mounting

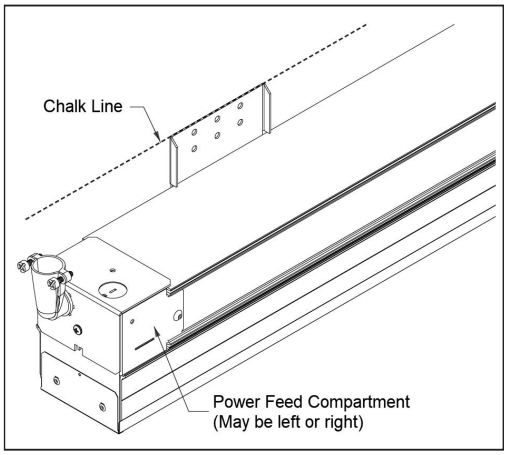

Step 3: Mounting Continued

If threaded rod, align bottom of fixture with chalk line and thread stop nut on each rod. When properly aligned tighten lock nut down onto bracket and stop nut.

If fixture has multiple sections, install next fixture section as indicated in the labeling. Position it so matching section labels are at the junction of the sections. Referring to (Fig 4), remove the jack screws (G) from the receiver bracket (H) on the outside edge of the fixture section. Raise the next section into position. Plug the power bus connectors (I) together then slide the spline (J) into the channels (K) of the receiving section. Be sure the bus wires retreat into the wiring compartment and are not pinched between the sections.

Now install the jack screws (G) through the bracket into the receiver bracket and tighten so that the section seem is completely closed. Do not over tighten.

Now screw the mounting brackets of the new section onto the perimeter wall with the top of the brackets on the chalk line, or attach to threaded rod a described above. . Repeat this process for all sections in the fixture run.

(Figure 2) If fixture is ordered with wall side trim (E) as "X" instead of standard "F" wall trim flange, then ceiling side of fixture should be supported with hanger wire fastened to structure above

Figure 4 - Internal Driver

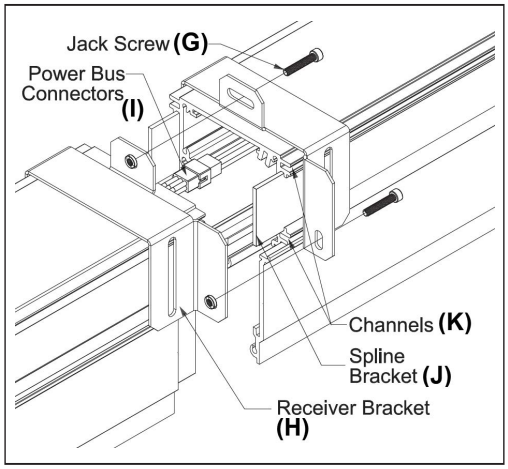

Step 3a: Extension (option)

(Figure 5) If fixture is ordered with extension section(s) on one or both ends then, after main housing is installed per the above instructions, remove the locking screws from the extension housing and slide the extension housing out to the desired position. Reinstall the locking screws in the holes in the extension housing. LED modules automatically extend to provide end-to-end illumination.

Each extension section is shipped with a 12" piece of wall and ceiling trim that matches the trim on the main housing. Measure the distance from the end of the main housing trim to the end cap on the wall side and on the ceiling side. Cut the provided wall and ceiling trim pieces to these measurements with a fine tooth metal saw. Using a miter box will create a square edge.

Remove the double sided tape from the top surfaces of the flange, insert the cut trim pieces into the extension housing and firmly press in place so tape adheres to the bottom surfaces of the extension housing flange.

The lens for this fixture will be longer (oversized) than the fixture itself in order to fill the extension housing. Place the oversized lens into the fixture snap tabs in the main housing and slide it so it firmly rests against the end cap in the extension housing. At the other end, the lens will overlap the next lens. Mark the oversized lens at the point where it begins this overlap - this will be the cutting point.

Remove the lens and carefully cut it with a fine tooth saw (using a miter box will ensure a square edge), and reinstall it into the fixture.

Figure 5 - Extension Section

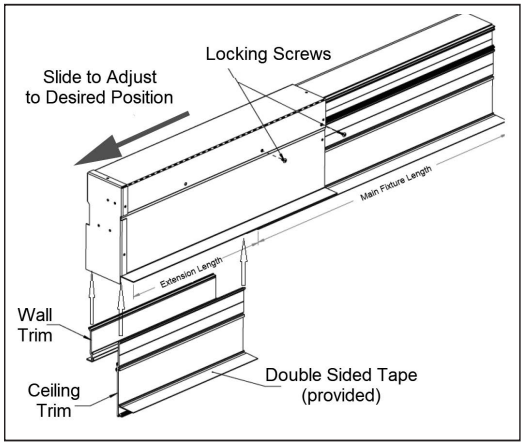

Step 4: Finishing (Figure 2)

Position architectural ceiling material so the edge is above and behind the fixture ceiling flange. Attach the material to its support system. The ceiling material should not exert force on the fixture. The fixture is not designed to support the ceiling material.

Step 5: Wiring

VRP (Internal Driver) (Figure 5)
If fixture was ordered with optional whip it may not be necessary to remove the Wiring Compartment Access Cover (L). Make all connections at the end of the whip. If whip is in the wrong orientation, remove the access cover by removing the Screw (M), rotate the cover, and reinstall it ensuring the Tab (N) goes into the channel, then reinstall the screw on the end of the fixture.

To field-wire the fixture remove wiring compartment access cover, then remove knockout(s) as required. Attach conduit via an approved connector and leave about 6" of wire extending past the connector. After making connections according to the table below carefully tuck the excess wire into the wiring compartment of the fixture and reinstall the cover as described above.

VRPX (External Driver) (Figure 6 and 7)
Note: Power to the remote driver and wiring between remote driver and fixture must be installed according to local electrical codes.
Remote drivers are programmed to match each fixture and labeled accordingly.

Ensure low voltage cables are connected to their corresponding remote drivers.
To access the mounting holes and wiring compartment, remove the Snap Cover (O) Fig 6, from the remote driver box with a small screwdriver. Remote drivers come with grid clips to allow snapping on to the top of grid main runners if permitted by local code. If screw mounting to structure is desired, remove the grid clips and insert mounting screws (by others) through pre-drilled holes to fasten driver box to appropriate structure.
Remove the 7/8" knockout at the line voltage side of the remote driver housing. Attach flex conduit using an approved knockout connector. Make power and dimming connections according the table below.
Each fixture segment has a low voltage plenum cable pre-wired internally. Cables are 6 foot nominal unless longer cables were ordered. Do not disconnect this cable from the fixture segment. If cable is not long enough, contact factory to order an extension cable. Route the plenum cable to the remote driver enclosure.
Open Low Voltage Cover (P) (Fig 6) by removing Cover Screw (Q). Route the low voltage cable with connector from the fixture section through the opening, and plug into a mating receptacle inside the enclosure (Fig 7). Reinstall the low voltage cover.
In some cases special remote driver enclosures will be provided to support more than one fixture segment. In those cases multiple cables will be run to that enclosure. Make sure each cable is plugged into its matching receptical based on labeling.

Figure 5 - Internal Driver

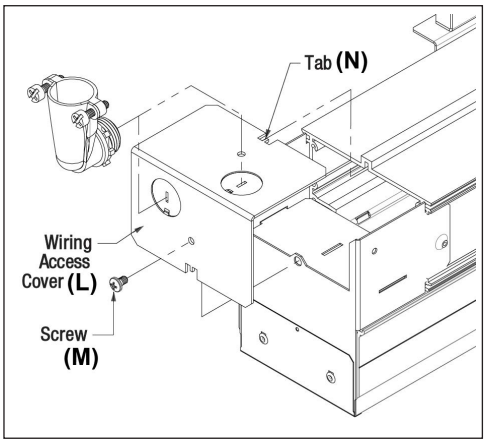

Figure 6 - Remote Driver

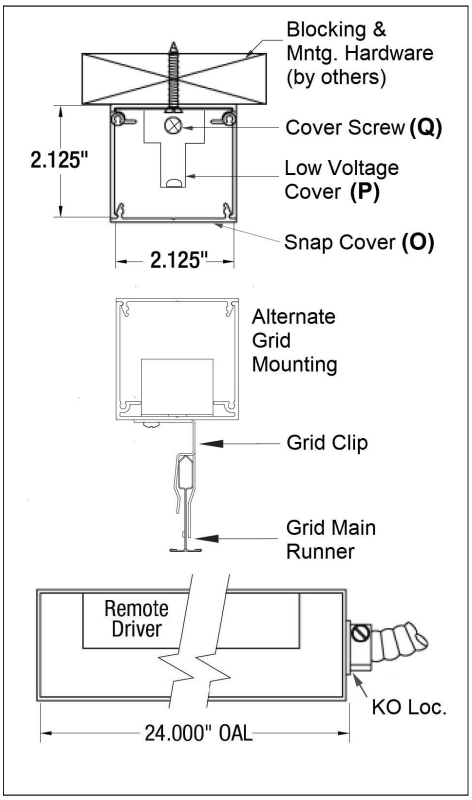

Figure 7 - Remote Driver

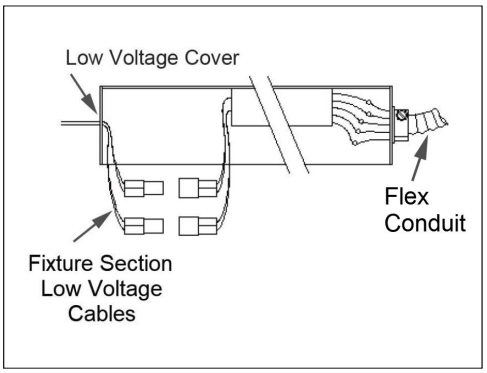

Wiring Codes

Function	0-10V Standard	ECO Lutron	DALI
Switched Line (120-277V)	Black	Black	Black
Neutral	White	White	White
Ground	Green	Green	Green
0-10V (+) Intensity	Purple		
0-10V (-) Intensity	Grey or Pink*		
0-10V (+) CCT - TW only	Purple/White		
0-10V (-) CCT -TW only	Brown		
E1 Intensity and TW CTT		Purple	
E2 Intensity and TW CCT		Grey or Pink*	
D(+)Intensity and TW CCT			Purple
D(-)Intensity and TW CCT			Grey or Pink*

* Per NEMA Bulletin #119

Service and Repair

Do not attempt to repair fixtures without first contacting the factory. Improper repair actions will void the warranty and can result in damage to the fixture components. Driver and LED components are custom configured at the factory. Generic replacements CANNOT be used – If parts need replacing, obtain them from the factory; properly configured for each fixture.
If directed to make a repair, turn off power to the fixture before disassembly.

CAUTION – Some fixtures have multiple circuits running through the wiring compartment, including un-switched circuits. BE SURE ALL POWER IS OFF.

LED and Driver Access

Lens removal (Fig 8) Press the provided suction cup onto the lens and pull down (R). This works best at the center of the lens section. For single section fixtures, it may be necessary to bow the lens slightly to clear both end cap lips.

Lenses are precision cut to match the fixture section. Ensure that lenses are reinstalled in the correct orientation and section from which they were removed.

Reflector removal (Fig 9) Turn Cams (S) with a flat blade screwdriver, then tilt reflector inward until free (Fig 10)

LED Tray removal (Fig 10) Turn Cams (T) with a flat blade screwdriver, then tilt LED tray downward until free. Unless tray needs to be replaced, it is generally not necessary to remove wiring. Simply rotate tray carefully so it hangs on wires at one end.

Figure 8 - Lens Removal

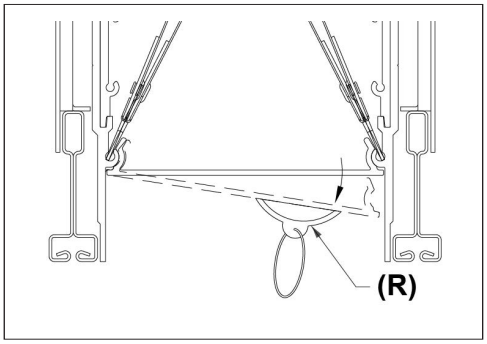

Figure 9 - Reflectors

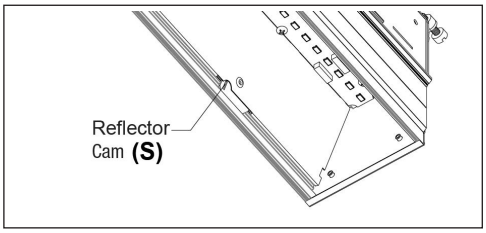

Figure 10 - LED Tray

