2"& 4" LED Low Profile Curved Linear Slot **Installation Instructions**



Series CVL2/4 (Flush Lens) CVR2/4 Regressed Lens

OVERVIEW: CV(L/R) fixtures are commonly installed in a sheetrock or other solid ceiling using plaster flange trim options. They can be installed in ACT ceilings using the flush trim option but the exposed edge of the curve cuts in the ACT, must be finished and supported by others. In all cases the ceiling is supported independently.

In special cases it may be possible for Starfire to provide a custom finished flange trim to hide the edge of the ACT material. That must be specified, quoted and ordered, and is not covered by these instructions. Note - Drawings are generic and depict 2" and 4" apertures with both level and regressed lens.

Step 1: Preparation -Templates

To assist in the construction of curved ceiling areas, Starfire provides a flat metal template in the shape of the designated curved fixture sections. The template is fabricated on CNC equipment to exactly match the fixture radius and width. When fabricating the opening, a small additional gap (~1/4") should be provided to allow the fixture clearance to enter the opening and not be distorted by misshaped openings. Plaster flanges and spackle will close the gap.

For Plaster Flange Below trim, structural blocking must be installed at the edges of the opening, so that the plaster flange can be screwed into it at every 12 to 18 inches, thereby supporting the fixture (Figure 1). Blocking must be level to the top of the sheetrock ceiling (Figure 3). Flange Above and Flange-Less trim fixtures are suspended from threaded rods (Figures 4 & 5). The template can help locate the centerline of the fixture for the rod placement.

Depending on the arc length of each defined curve, templates may be single plates or multiple plates that are screwed together with joining plates (Figure 2). In certain cases where arc lengths are very long, it is not practical to make a complete arc. In those cases, since the curve is uniform, the template can be positioned to mark ceiling and stud locations, then repositioned to complete the process.

Where applicable, templates will have small straight sections at the ends of the curve to help alignment with the adjacent straight sections.

There will be a unique template for each radius on the project. If the same radius is used at more than one location, the provided template should be reused.

Templates are generally fabricated 1 week after the submittal drawings are approved for release. That places them on site generally 5 to 6 weeks before the actual fixture sections, allowing time for ceiling construction.

Use

The template is used to position blocking and to mark the ceiling to be cut. For Plaster Flange Below, place blocking so it meets the template with about 1/4" spacing off the edge to the template (Figure 1). Ensure the bottom of the blocking is recessed from the finished ceiling height so the fixture will be flush when sheetrock is installed. For Plaster Flange Below ceiling the sheetrock is installed before the fixture. The template can be used on the sheetrock after it is mounted to open the channel for the fixture. For Plaster Flange Above and Flangeless trim, the fixture is hung from threaded rod located above brackets on the top of the fixture before the sheetrock or ACT is installed. The template can be used on the sheetrock before it is mounted to cut it to shape.

Figure 1

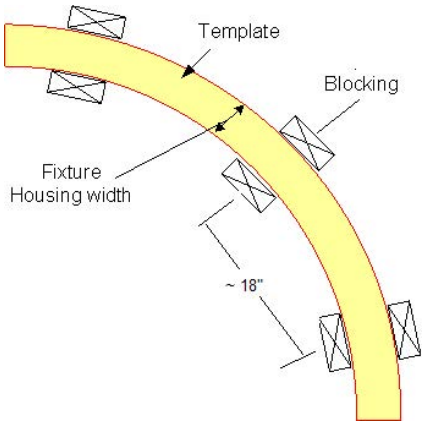

Figure 2

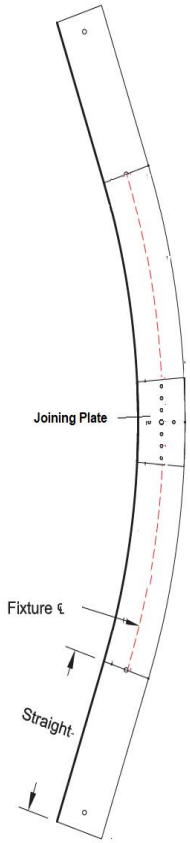

Step 1: Unpacking

Unpack fixtures. Refer to fixture labels for assembly order. Refer to submittal drawing for layout. In most cases, fixtures are shipped with lenses installed

NOTE: Lenses are precision cut to compensate for expansion and eliminate light leak. If removed, install in their original designated fixtures/sections only. If lenses are shipped separately ensure they are installed in fixture sections with matching label designations.

Plaster Flanged fixtures are shipped with lenses installed and removable spacer brackets attached over the lenses and to the plaster flange. These spacer brackets help prevent distortion of the aperture by angled insertion of mounting screws. **After** the fixture is fully mounted these spacer brackets are to be removed and then spackle applied over the flanges.

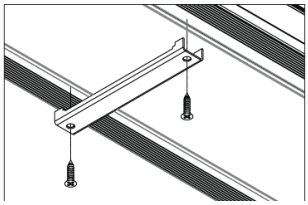

Step 2: Mounting Preparation

Curved Power Feed Section

Install power feed fixtures sections first. If the fixture includes both straight and curved sections, the power feed will generally be in the straight sections. If the curved section is a power feed section, ensure the flex conduit is in place with enough slack to allow it to come below the ceiling line and be attached to the top of the housing. Remove the wiring cover screws and lift the cover off the housing. Attach the conduit connector to the cover with enough slack wire to make internal connections.

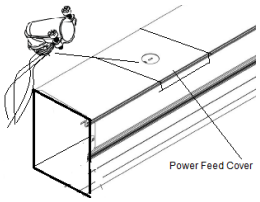

Raise the section toward the ceiling and reattach the wiring cover with the removed screws and proceed with mounting the section.

Step 3: Mounting

Plaster Flange Below Trim
Insert the fixture into the pocket and align around the curve arc so the ends of the section are correctly positioned to mate with adjoining sections. Drive sheet rock screws through slotted holes in the plaster flange, through the sheetrock ceiling and into the blocking (Figure 3). Ensure the screws are driven vertically so as not to force the fixture housing out of shape.

For additional sections
Remove the jack screw from one brace at the section joint (Figure 6).
Raise the next section into position.
Insert the splines from each section into the corresponding channels on the adjoining section.

- **Dimensions** CVL2 with flush lens

Figure 3

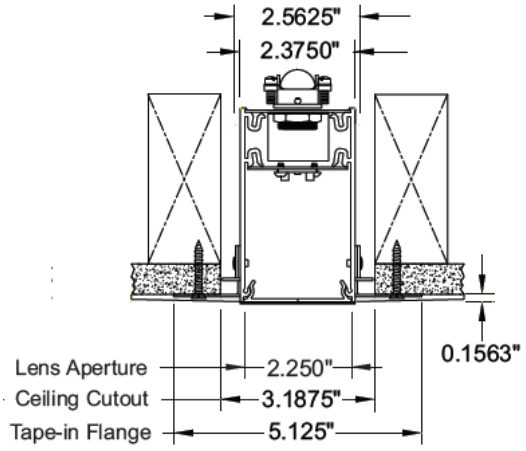

Plaster Flange Below Ceiling

Figure 4

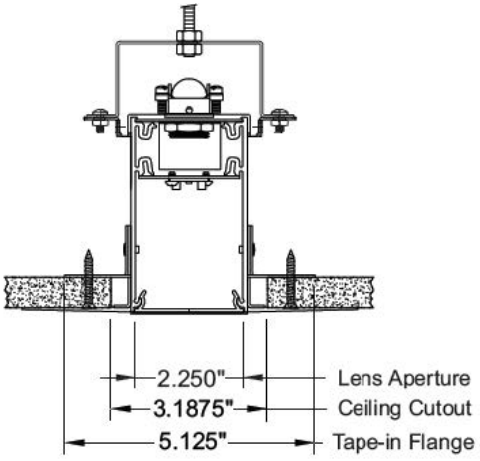

Plaster Flange Above Ceiling

Figure 5

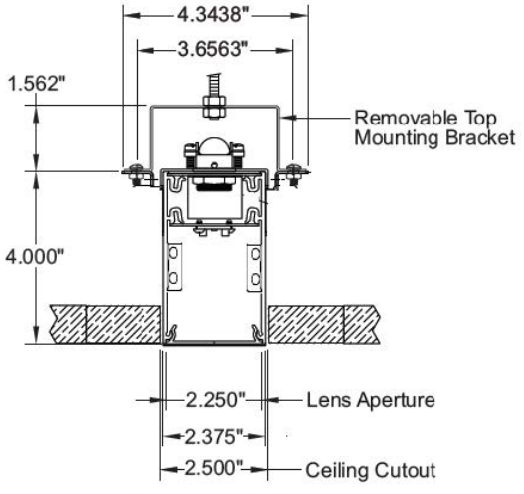

Flangeless Profile

Locate the Power/Dimming buss connector and plug it into mating connector in the adjoining section. (Figure 7). Tuck the wires out of the way and the slide the sections together. Insert the jack screw through one brace into the other and tighten, pulling the sections together.
On the new section drive sheet rock screws through slotted holes in the plaster flange, through the sheetrock ceiling and into the blocking (Figure 3). Ensure the screws are driven vertically so as not to force the fixture housing out of shape.

Once all sections are in place. Remove the spacer brackets and spackle over the flange and mounting screws

Plaster Flange Above Trim
These fixtures must be installed before the sheetrock ceiling is in place.

Raise the section and attach it to the threaded rods with one nut above and one nut below the mounting bracket (Figure 4). Adjust the height to conform to the final ceiling height and counter tighten the nuts against each other.

Once the fixture is in place, the sheetrock ceiling is cut to shape and bought to the edge of the fixture. Drive sheetrock screws through the sheetrock into the plaster flange above (Figure 4).

Note. The fixture is NOT intended to support the sheetrock. The attachment is only to prevent shifting and cracking of the spackle joint.

For additional sections
Remove the jack screw from one brace at the section joint (Figure 6).
Raise the next section into position.
Insert the splines from each section into the corresponding channels on the adjoining section (Figure 7).
Locate the Power/Dimming buss connector and plug it to mating connector in the adjoining section (Figure 7). Tuck the wires out of the way and then slide the sections together.
Insert the jack screw trough one brace into the other and tighten to pull the sections together.
Install ceiling as described above.

Once all sections are in place. Remove the spacer brackets and spackle over the flange and mounting screws.

Flangless Trim

If immovable ceiling material is used, these fixtures must be installed before the ceiling is in place. If movable ACT then these fixtures can be installed after the ceiling grid is in place.

Raise and attach the fixture to the threaded rods with one nut above and one nut below the mounting bracket (Figure 5). Adjust the height to conform to the final ceiling height and counter tighten the nuts against each other.

For additional sections
Remove the lens at the end of the sections to be joined.
Remove the jack screws from the inside splines at the section joint.
Raise the next section into position.
Insert the splines from each section into the corresponding channels on the adjoining section.
Locate the Power/Dimming buss connector and plug it into the mating connector in the adjoining section (Figure 7). Tuck the wires out of the way and the slide the sections together.
Insert the jack screws through each side spline into the receiving spline and tighten to pull the sections together.
Close the ceiling per manufactur's specification.

Figure 6

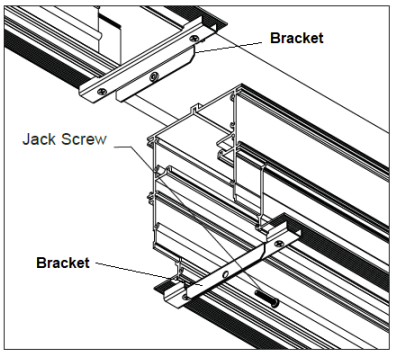

Figure 7

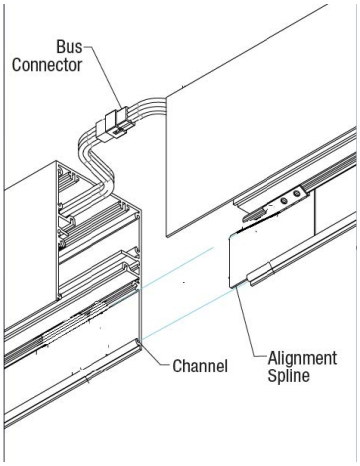

Figure 8

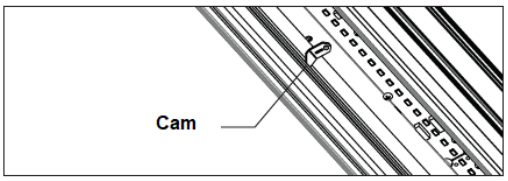

Step 4: Wiring

Preparation (power feed sections only)

Install power feeds at designated locations first.

If fixture was ordered with an optional whip, it is not necessary to make any connections in the fixture. Make connections at J-Box using wiring code table.

If whip is not included, attach conduit via an approved connector and leave about 6" of wire extending past the connector as described above.

Remove the lens covering the power feed point.

Remove the LED tray covering the power feed point by rotating the cams along the edge of the tray (Figure 8). It is not necessary to disconnect the wires from the tray. Carefully let it hang from the fixture.

Make power and dimming connections according to the table to the right.

Carefully tuck the excess wire into the wiring area as described above.

Wiring Codes

Function	0-10V Standard	ECO Lutron	DALI
Switched Line (120-277V)	Black	Black	Black
Neutral	White	White	White
Ground	Green	Green	Green
0-10V (+) Intensity	Purple		
0-10V (-) Intensity	Grey or Pink*		
0-10V (+) CCT - TW only	Purple/White		
0-10V (-) CCT -TW only	Brown		
E1 Intensity and TW CTT		Purple	
E2 Intensity and TW CCT		Grey or Pink*	
D(+)Intensity and TW CCT			Purple
D(-)Intensity and TW CCT			Grey or Pink*

* Per NEMA Bulletin #119

Step 5: Closing

Reinstall the LED trays by inserting the edge without cams into the channel in the extrusion, then tilt the tray into a horizontal position and tighten the locking cams.

Reinstall lenses in their original section. Raise lens inserting one edge into housing and pressing the other edge into housing so it snaps in firmly
Note: lenses are precision cut to each fixture section. Installing them in other locations will cause light leaks or lens damage.

Step 6: Spackling

If the fixture is ordered with Plaster Flange Above or Below it is recommended to apply masking tape along the edge of the lens so that spackle, sanding dust or paint do not get on the lens or in the housing and on the LEDS.

Apply spackle as shown in Figure 9 (PFA shown), then sand smooth and paint.

When paint is dry, remove protective tape.

Figure 9

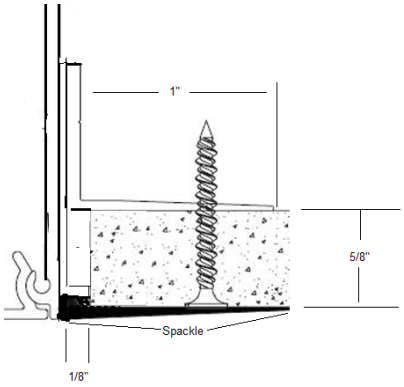

Service and Repair

Do not attempt to repair fixtures without first contacting the factory. Improper repair actions will void the warranty and can result in damage to the fixture components. Driver and LED components are custom configured at the factory. Generic replacements CANNOT be used – If parts need replacing, obtain them from the factory; properly configured for each fixture.
If directed to make a repair, turn off power to the fixture before disassembly.

CAUTION – Some fixtures have multiple circuits running through the wiring compartment, including un-switched circuits.
BE SURE ALL POWER IS OFF.