1" LED Linear Bracket

Series BUN1

Indirect Linear Bracket with Internal Driver

Installation Instructions



OVERVIEW: BU1 flush lens indirect light fixtures is intended to be installed on a wall surface by attaching provided mounting brackets a power junction box and blocking that is affixed to building structure. Multi-section fixtures are aligned and clamped together with Joining Brackets at section seams.

NOTE: Refer to electrical design for proper power and control circuiting

Preparation

Install power feeds and blocking at designated locations first. See approved submittal drawing for locations. The power feed junction box should be a 2" x 4" handy box at the power feed location. A cover plate is not needed as wall bracket and fixture bracket create a class 1 enclosure to pass wiring from the junction box into the fixture. The Junction Box is to be mounted horizontally and secured to structure to support fixture weight. At non-power feed locations, only structural blocking is required to attach brackets .

WARNING:

- Fixtures will require some disassembly. Only disassemble components as directed.
- Do not disassemble the lighting modules. There are no user serviceable parts inside.
- Power and dimming wiring must be installed according to local electrical codes.
- The recessed single gang Handy Box must be at the correct height so that the fixture will be at the desired height when the cover plate and attached mounting bracket is screwed on. There is no vertical adjustment.

Figures 1 and 2 - show the fixture profile dimensions and specifically the vertical positioning of the power feed Junction Box at the feed location (typically one per run) and the Wall Bracket to blocking at all other mounting points. Refer to approved submittal drawings for horizontal location.

Step 1: Unpacking

Unpack fixtures from crates/boxes. Locate power feed section and note section labels. Refer to submittal drawing for assembly order. Sections are cut and wired for installation in designated positions only. **Note:** Lighting modules and their lenses are precision cut to fit in their respective housings. Lighting modules have bullet connectors at each end which will only mate with housing connectors if installed in the correct orientation. After removal, ensure lighting modules are reinstalled in their designated housing with the correct orientation.

Step 2: Disassembly Figures 3 and 4

To mate joining brackets and to make power and dimming connections in the power feed section, the lighting module must be removed from the fixture housing. If the section is a stand alone section, insert a small flat blade screwdriver into the notch at the edge of the housing and twist (see Figures 3 and 4). The lighting module will pop out of the snap clips holding it in place. If the section is part of a multi-section run, just reach in the open and and pull the module free of its snap clips. Once the module is free, disconnect the bullet connectors at each end. Hold the body of the connectors then twist and pull them apart. **Note:** Do not pull on the wires, only the body of the connectors. Place the lighting modules aside. Do not mix up modules, so they are returned to their original fixtures.

Remove the top screws from the wall brackets separating the wall plate portion from the fixture plate portion of the bracket.

Figure 1

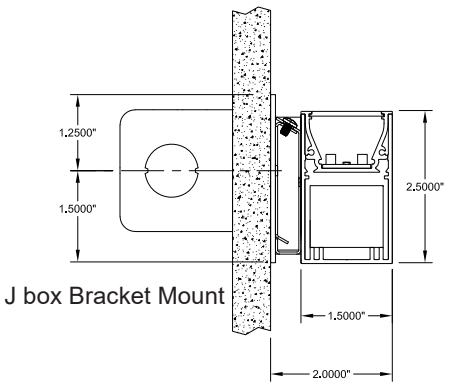

Figure 2

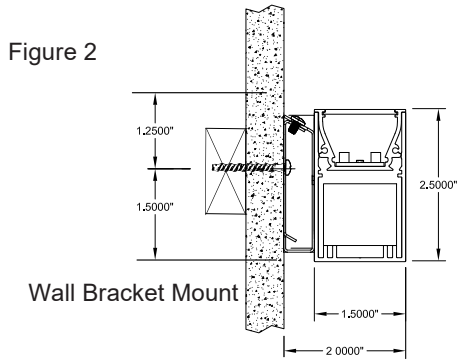

Figure 3

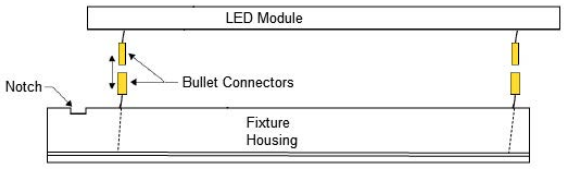

Figure 4

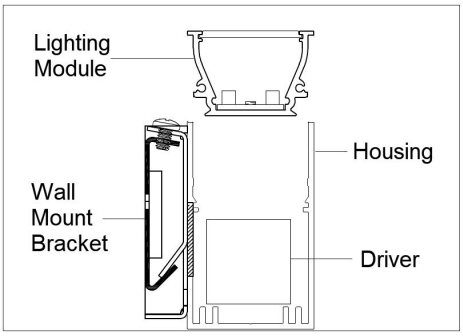

Step 3: Mounting Fixture

Single Section Fixtures

With the lighting module removed, position the power feed end of the fixture at the Handy Box location. If not previously done, remove the 2 screws on top of each mounting bracket and separate the wall plate and fixture plate of the brackets.

Screw the wall mounting plates into blocking at the correct position. Feed the power and dimming wires through the hole in the box cover plate and screw the cover plate onto the J box. At least 6" of wire should be exposed (Figure 5).

Raise the housing and feed the exposed wire into the hole at the power feed point. Tilt the housing slightly and hook the mounting brackets together. Reinstall the 2 screws removed from the top of each bracket.

Figure 5

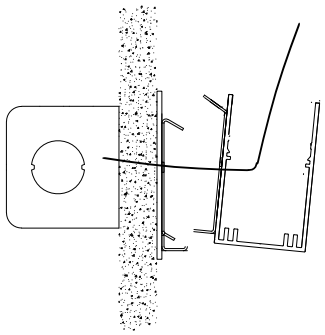

Multi-Section Fixtures

Identify the next section to be mounted. It will have a label matching the section that is already on the wall. Remove its lighting module as described above.

Remove the screws from the Wall Mounting Brackets and attach the wall plates to the wall in the proper positions.

Before installing this Fixture section, remove the Jack Screw from the Receiving Bracket inside the housing on this section (Figure 6). DO NOT DISCARD; it is used to draw the sections together). Removal and installation is best done with a 5/32" ball head Allen driver. One is supplied with each installation.

Figure 6

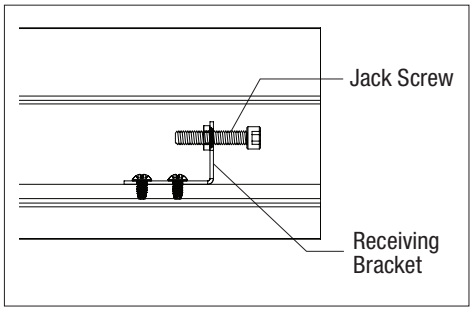

Loosen (do not take out) the 2 screws that hold the retractable spline in position and fully retract the spline (Figure 7).

Figure 7

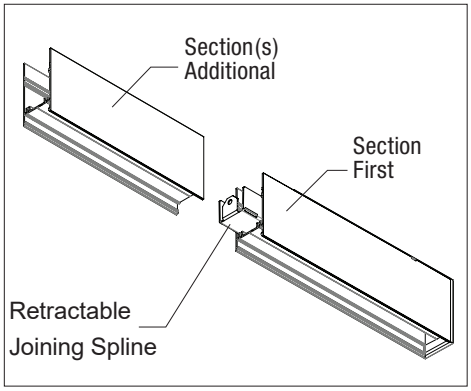

Raise the new section into position. Tilt the housing slightly and hook the mounting brackets together. Reinstalled the 2 screws removed from the top of each bracket. Do not tighten them yet.

Fully extend the retractable joining spline into the other section and tighten its mount screws

Reinstall the jack screw through the retractable joining spline and into the receiving bracket (Figure 8). Tighten it until the sections have a hairline seam between them. Ensure the wiring buss is not caught in the seam.

Figure 8

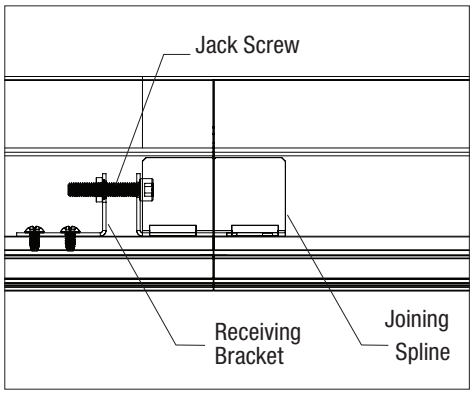

Tighten the 2 screws at the top of each Wall Mounting Bracket.

Plug the wiring bus connectors together and tuck the wires into the housing so they will not interfere with the lighting module when it is reinstalled.

Repeat the process for the remaining sections

Step 4: Wiring

After the entire fixture run is mounted make connections from above according to the following table. Non-power feed sections receive their power and dimming control via an internal bus. Do not cut or modify the bus wiring.

Wiring Color Codes

Function	Standard 0-10V Dimming	Lutron 3 Wire Line Dimming	Lutron Eco Dimming	DALI
Switched Line (120-277V)	Black	Black	Black	Black
Neutral	White	White	White	White
Ground	Green	Green	Green	Green
Intensity 0-10V (+)	Purple			
Intensity 0-10V (-)	Grey/Pink			
CCT (TW option only) 0-10V (+)	Purple/White			
CCT (TW option only) 0-10V (-)	Brown			
Dimmed Line		Orange		
E1			Purple/White	
E2			Purple	
D1				Purple/White
D2				Purple

Reinstall the Lighting Modules

Identify the lighting module taken from its respective housing. Orient the module so the bullet connectors will mate (M/F), pair are at each end. Tuck the wires into the housing avoiding the snap clips. Lower the lighting module into place. Press down firmly until it snaps into position.

When the lighting module is fully engaged, it will click into place and will be flush to the housing. If it does not click into place, extract it and make sure the wires are not between the lighting module and the snap clips.

Repeat this process for any remaining sections.

Finish

Turn power on and test operation.

Service and Repair

DO NOT attempt to repair fixtures without first contacting the factory. Improper repair actions will void the warranty and can result in damage to the fixture components. Driver and LED components are custom configured at the factory. Generic replacements CANNOT be used. If any parts need replacing, they can be obtained from the factory; properly configured for each fixture.

If directed to make a repair, TURN OFF ALL POWER first.